HEAT PUMP COMBI UNIT PKOM^4 INSTALLATION MANUAL

PATENT

ECO FRIENDLY

AUSTRIA

CERTIFIED COMPONENT
Passive House Institute

250 m³/h

1.500 watt

1.400 watt

4 – 5 persons

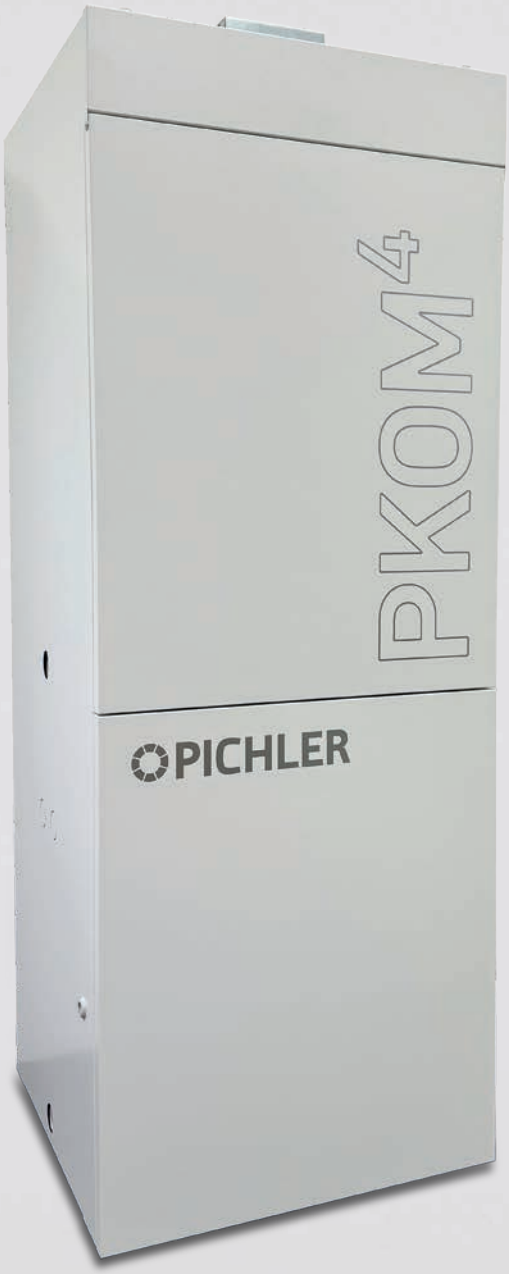

COMFORT VENTILATION

GET IT ON Google Play

Download on the App Store

PICHLER

Systematic ventilation.

Contents

1. Introduction / general information Page 4

2. Designated use Page 5

2.1 INTENDED PURPOSE PAGE 5
2.2 REGULATIONS FOR THE OPERATION WITH FIREPLACES PAGE 6
2.3 PROVISIONS FOR THE OPERATION WITH EXTRACTOR HOODS PAGE 6

3. Liability Page 6

4. Warranty Page 7

5. Safety Page 7

5.1 SYMBOLS USED IN THIS DOCUMENT PAGE 7
5.2 SAFETY INSTRUCTIONS PAGE 8
5.3 REFRIGERANT R1234YF PAGE 8
5.4 DEVICE INSTALLATION PAGE 8
5.5 ELECTRICAL CONNECTION WORK PAGE 9
5.6 AIR CONNECTIONS PAGE 9
5.7 WATER CONNECTIONS PAGE 9
5.8 SYSTEM OPERATION PAGE 10

Assembly/Installation

6. Scope of supply, transport, storage and disposal Page 10

6.1 SCOPE OF SUPPLY SEITE 10
6.2 TRANSPORT AND PACKAGING SEITE 11
6.3 STORAGE SEITE 11
6.4 DISPOSAL SEITE 11

7. Product description Page 12

7.1 PKOM⁴ CLASSIC (RIGHT-HANDED VERSION) PAGE 12
7.2 PKOM⁴ TREND (RIGHT-HANDED VERSION) PAGE 12

8. Layout sketch Page 13

8.1 PKOM⁴ CLASSIC (RIGHT-HANDED VERSION) PAGE 13
8.2 PKOM⁴ TREND (RIGHT-HANDED VERSION) PAGE 13

9. Setting up the device Page 14

10. Air connections Page 15

10.1 DIMENSIONS SEITE 15
10.2 PRESSURE - FLOW RATE CHARACTERISTIC SEITE 15
10.3 SOND INSULATION SEITE 16
10.4 STRUCTURE-BORNE SOUND DECOUPLING SEITE 16
10.5 THERMAL INSULATION SEITE 16
10.6 FAÇADE CLADDING SEITE 17

11. Domestic hot water (DHW) cylinder Page 17

12. Condensate connection Page 18

13. Impressed current anode Page 18

14. Electrical connection Page 19

14.1 ELECTRICAL WIRING DIAGRAM VOLTAGE SUPPLY AND LAN CONNECTION PAGE 19
14.2 FUSES PAGE 20
14.3 DEVICE SWITCH PAGE 21
14.4 ELECTRICAL WIRING DIAGRAM TOUCH CONTROL UNIT PAGE 21
14.5 ELECTRICAL WIRING DIAGRAM MAIN BOARD PAGE 22
14.6 ELECTRICAL WIRING DIAGRAM VENTILATION BOARD PAGE 22
14.7 ELECTRICAL WIRING DIAGRAM HEAT PUMP BOARD PAGE 23
14.8 ELECTRICAL CONNECTION PLAN – PCB FOR IMPRESSED CURRENT ANODE PAGE 24

15. System description Page 24

15.1 FUNCTIONAL DIAGRAMS PAGE 24
15.2 FROST PROTECTION OPTIONS PAGE 27
14.3 CONVENIENT OPERATION USING THE PICHLER APP & PICHLER CONNECT PAGE 27
14.8 REMOTE ACCESS / PICHLER CONNECT PAGE 27
14.9 DATA PROTECTION PAGE 27

16. Extension options Page 28

16.1 ACCESS TO SERVICE MENU PAGE 28
16.2 EXTERNAL ELECTRIC HEATING BATTERY PAGE 29
16.3 HEATING CIRCUIT PAGE 30
16.4 SOLAR THERMAL ENERGY PAGE 31
16.5 DEMAND-DRIVEN CONTROL OF THE AIR VOLUMES PAGE 32

COMMISSIONING

17. Maintenance and cleaning Page 36

17.1 CHECKLIST FOR MAINTENANCE WORK PAGE 36
17.2 CHECK AND CLEANING OF COUNTERFLOW HEAT EXCHANGER PAGE 36
17.3 CHECK AND CLEANING OF FANS PAGE 37
17.4 CHECK AND CLEANING HEAT EXCHANGER AND CONDENSATE TRAYS PAGE 37
17.5 CHECK AND CLEANING CONDENSATE DRAINS PAGE 37
17.6 INSPECTION OF THE COOLING CIRCUIT PAGE 38
17.7 MAINTENANCE CHECKLIST PAGE 39
17.8 PARAMETER LIST PAGE 41
17.9 ERROR DESCRIPTION PAGE 43

18. Installation/Operation of service software and firmware updates Page 50

19. Spare parts and accessories Page 50

19.1 CONTROL ELEMENTS PAGE 50
19.2 SYSTEM COMPONENTS PAGE 50
19.3 AIR FILTER PAGE 50
19.4 GATEWAY PAGE 50

20. Technical specifications Page 51

20.1 VENTILATION PART WITH HEAT PUMP PAGE 51
20.2 HOT WATER PART WITH HEAT PUMP PAGE 51
20.3 ELECTRICAL PAGE 51
20.4 HOUSING PAGE 52
20.5 ACOUSTIC DATA PAGE 52
20.6 RESISTANCE VALUES TEMPERATURE SENSOR PAGE 52
20.7 DATA IN ACCORDANCE WITH EU REGULATIONS PAGE 53

21. Changes reserved Page 53

1. Introduction / general information

The heat pump combi unit PKOM⁴ complies with the state of the art. It is characterised by cost effectiveness, ease of use and reliability.

Use the heat pump combi unit only when in perfect condition and for its designated use, be aware of safety and any hazards and cognisant of all the notes and information contained in this manual. Please always keep the model and serial number (see nameplate on unit) at hand, in case of queries or when ordering spare parts.

To operate your heat pump combi unit safely, properly and economically, please read this installation instructions carefully and follow them provided.

This installation manual contains notes and information on safe operation and proper installation of the heat pump combi unit and on its use and servicing. Furthermore, reference these instructions during servicing to ensure proper execution of the tasks. Keep this installation instruction at hand in a safe place.

Fault elimination and manipulation of the heat pump combi unit may exclusively be carried out by specialist companies with trained personnel certified for this purpose.

Changes reserved:
These installation instructions have been compiled with the utmost care. This does not, however, imply any rights. We constantly strive to improve and optimise our products technically and we reserve the right to modify our apparatus or technical data fully or in part and without prior notification. Your unit may therefore vary slightly from the description in this manual.

Our "General terms and conditions" in their latest version apply.

PICHLER
J. Pichler Gesellschaft m.b.H.

9021 KLAGENFURT
Karlweg 5
T +43 (0)463 32769
office@pichlerluft.at

2. Designated use

2.1 INTENDED PURPOSE

The heat pump combi unit PKOM⁴ has been designed and manufactured for use in the field of controlled mechanical aeration and ventilation with an additional heating and cooling function for flats and rooms with a similar purpose such as seminar rooms and small offices. The heating performance for the service water heating is designed for an average hot water demand (draw-off profile L in compliance with EN 16147).

The heat pump combi unit PKOM⁴ is intended for installation in residential buildings or in commercially used objects. It is a compact ventilation unit with an integrated heat pump module and is used for the mechanical aeration and ventilation of rooms and their conditioning (heating or cooling). In the version with a reservoir additionally the service water is heated and provided.

Designated use extends to a maximum air air volume flow of 250 m^3/h for the supply and extract air.

The heat pump module, which consists of two separately working refrigeration circuits, enabling heating of the service water with simultaneous heating or of the supply air.

The supply sections are supplied with filtered and conditioned fresh air. The extract air containing humidity and odours is dissipated from the bathroom, toilet and kitchen.

The extracted air must be free of aggressive vapours and substances causing wear. Any other use shall be deemed contrary to designated use. The manufacturer shall accept no responsibility for damages or consequential damages arising from improper use.
Designated use also includes adherence to the maintenance work prescribed in the installation instructions.

This unit is not intended for use by persons, including children, with limited sensory or mental capacities or lacking experience and/or knowledge, unless under supervision or instruction of a person responsible for their safety. The unit is not suitable for outdoor installation and may be installed in suitable and temperature-controlled interior areas only. The heat pump combi unit is not suitable for drying and heating out new buildings.

The heat pump combi unit of the type PKOM⁴ is not a ready-for-use product and may only be commissioned after having been installed and connected properly in the ventilation system. Only qualified and instructed personnel may work on and with the unit. Persons transporting, installing or working on the unit must have read and understood the installation instructions, in particular *section 5 "Safety"*.

The end user must also be instructed on potential hazards.

2.2 REGULATIONS FOR THE OPERATION WITH FIREPLACES

Local requirements must be taken into consideration by compliance with corresponding standards, laws and directives.

The heat pump combination units with heat recovery may only be installed in rooms, flats or utilisation units of a comparable size in which fireplaces dependent on room air are installed, if:

- simultaneous operation of room air-dependent fireplaces and the air extraction unit is prevented by safety devices, or
- the flue gas evacuation of the room air-dependent fireplace is monitored by special safety devices.
  - In the case of room-air dependent fireplaces for liquid or gaseous fuels, activation of the safety device must lead to the switch-off of the fireplace or ventilation unit.
  - In the case of room-air dependent fireplaces for solid fuels, activation of the safety device must lead to the switch-off of the ventilation unit.

The heat pump combination units for the controlled aeration and ventilation of a flat or a comparable living unit must not be installed if room air-dependent fireplaces in the living unit are connected to exhaust gas systems, which themselves have multiple connections.

Shut-off device
Normal operation of the ventilation systems established by means of the heat pump combination units requires the possibility of shutting potentially available combustion air ducts as well as exhaust gas systems off from room air-dependent fireplaces.
In the case of exhaust gas systems of fireplaces for solid fuels, it must be ensured that the shut-off device can only be operated manually. The position of the shut-off device must be identifiable by the setting of the operating handle. This specification is considered as complied with if a shut-off device against soot is used.

Fire protection requirements
With regard to the fire protection installation regulations for the set-up of the ventilation unit, the provisions of national law, in particular the building regulation concerning the fire protection requirements with regard to ventilation systems in the relevant latest version must be observed.

2.3 PROVISIONS FOR THE OPERATION WITH EXTRACTOR HOODS

Due to the heavy load as well as the irregular operation, the extract air of a kitchen extractor hood must not be integrated into the dwelling's ventilation system. Extract air from such extractor hoods must be conducted separately by means of an exhaust air pipe over the roof. The supply air must be provided for separately (e.g. by window ventilation). If an extractor hood without the separate provision of supply air is operated, the balance of the air volume in the dwelling is no longer kept and the proper function of the dwelling's ventilation system is no longer ensured (odour diversion, etc.). Another option is to operate the extractor hood in recirculation mode.

3. Liability

Any other use of the heat pump combi unit PKOM⁴ than the use specified *under section 2 "Designated use"* is considered as improper and may result in personal damage or damage to the heat pump combi unit PKOM⁴, for which which manufacturer will not accept any liability.

The manufacturer accepts no responsibility for any damage due to:

- non-compliance with the safety, operating and servicing instructions given in these installation instructions
- the installation of spare parts that have not been supplied by the manufacturer, the responsibility for the use of such spare parts being fully borne by the system builder/installer.
- normal wear and tear

4. Warranty

The warranty period shall commence after the unit is put into operation, but no later than one month after delivery. You can find details on the warrantee in our "General terms and conditions" in the current version and the dealer conditions in your country. The warranty shall be subject to proof of services performed as per our instructions and executed by a licensed installer/specialised company.

Warranty claims shall be limited to material and/or constructional defects occurring during the warranty period.
In the event of a warranty claim, the heat pump combi unit PKOM⁴ must not be disassembled without the prior written consent of the manufacturer. The manufacturer's liability shall be limited to spare parts installed by an installation company approved by the manufacturer.

The warranty shall automatically lapse at the end of the warranty period, following improper operation such as operation without a filter, if parts other than original manufacturer-supplied parts are installed, or if unauthorised changes or modifications are made to the unit.

Furthermore, the warranty is rendered void by failure to comply with the information in these installation instructions.

5. Safety

Read these installation instructions carefully and observe the safety instructions while you carry out installation, commissioning, servicing or general work on the ventilation unit. Keep the installation instructions near the unit for its entire service life.

Always observe the safety regulations, warnings, notes and instructions given in this installation manual. The specifications given in this document must not be altered. Non-observance of these safety regulations, warnings, notes and instructions may lead to physical injury or damage to the heat pump combi unit.

The conclusion of a service contract is recommended to ensure that the unit will be checked at regular intervals. Ask your supplier about approved specialised companies/installers in your area.

5.1 SYMBOLS USED IN THIS DOCUMENT

The following Safety symbols highlight text containing warnings in respect of danger and potential hazards. Please familiarise yourself with these symbols.

Note!

Caution, fire hazard! Ignoring this warning may lead to injury or threat to life and limb.

Attention – High voltage! Ignoring this warning may lead to injury or threat to life and limb.

Attention! Ignoring this warning may lead to injury or threat to life and limb and/or damage to the unit.

5.2 SAFETY INSTRUCTIONS

Installation, initial start-up, maintenance and repairs must only be carried out by an authorised specialist company.

Over and above this installation instructions, local and national regulations and standards shall also apply to the operation of this unit without limitation.

Take instruction from your installer on the unit and on its control unit following installation. The heat pump combi unit must only be used in accordance with the information provided in *section 2 "Designated use"*.

All safety and danger notices attached to the unit and specified in this description must be observed.

In the event of malfunctioning, switch off the unit immediately. The heat pump combi unit must be appropriately secured against restart. Faults must be remedied immediately.

After repairs and maintenance work, qualified personnel must verify that the unit is safe to operate.

Attachment or installation of additional parts and components is not permitted. Any modification of the heat pump combi unit is prohibited. Only original spare parts may be used.

Ensure that children do not play with the unit.

5.3 REFRIGERANT R1234YF

R1234yf is a refrigerant of the hydrofluoroolefins (HFO) group with a very low global warming potential (GWP) of 4 and no ozone depletion potential (ODP = 0).

R1234yf belongs to the A2L flammability class, which means that it is flame retardant. The refrigerant is non-toxic, but toxic compounds can be formed at high temperatures (e.g. in the event of fire).

The refrigerant R1234yf has a weight of 114.04 g/mol and is heavier than air, therefore. This means that if refrigerant escapes, it can accumulate at ground level!

5.4 DEVICE INSTALLATION

To ensure safe operation of the PKOM⁴ heat pump combination unit, the following safety measures must be observed when installing the unit:

- Minimum room space: The use of refrigerant R1234yf requires a volume of at least 2.35 m^3 in the room where the device is installed in order to meet the requirements of the EN 378 directive.
- Sound decoupling: To avoid structure-borne sound transmission, a separating joint should be installed in the floor at the installation site. Alternatively, the PKOM⁴ can be set up on a suitable, structure-borne sound-absorbing support surface.
- Maintenance clearance: Depending on the device model, sufficient space should be provided for maintenance work.

No appliances with naked flames may be operated in the room where the device has been installed (e.g. gas boiler).

For more detailed instructions and sketches for setting up the device *(see section 9 "Setting up the device")*.

5.5 ELECTRICAL CONNECTION WORK

Electrical connection work and work on the system's electrical components may be carried out by authorised electricians only, in compliance with national and local regulations.

Before opening the unit and when carrying out work on the unit e.g. maintenance work and repairs, the unit must be isolated from the mains (all poles disconnected) and secured against being switched back on for the duration of the work. The heat pump combi unit is designed for a voltage supply of 230 V/50 Hz.

Work practices that could potentially damage the unit are prohibited. To ensure safe operation, safety devices must not be removed or bypassed.

Electrical equipment and the unit's warning and protective devices must be inspected regularly to ensure that they are in perfect working order. In the event of faults in the electrical power supply or identification of defects e.g. loose connections or burnt or defective cables, the unit must be switched off immediately. The unit may not be operated until safe operational conditions are restored.

Fault finding and immediate remediation of electrical defects and malfunctions shall be carried out by authorised electricians only. All protective measures must be inspected (e.g. earth resistance, etc.) after completion of electrical work on the unit. *For details, see section 14 "Electrical Connection".*

5.6 AIR CONNECTIONS

The Ø 160 mm or Ø 200 mm air pipes are to be connected to the overhead connection piece. Sufficient air tightness is to be ensured.

The air pipes and attachments such as sound absorbers etc. may only be attached to the heat pump combination unit using adequately dimensioned elements for mounting to suitable solid wall or ceiling structural components. We also recommend using structure-borne sound insulating installation material. Avoid using flexible hoses for connections to the unit or keep them as short as possible.

When making connections, ensure in particular that no tools or assembly material can fall into the connections to the unit or onto the unit itself. This could result in damage to components. Air pipes and installation components must be suitably and adequately insulated in accordance with project specifications.

5.7 WATER CONNECTIONS

The regionally valid regulations and standards must be observed! As prescribed for all pressure vessels, the DHW cylinder must also be fitted on site with a type-tested safety valve and a check valve. The cold water supply is located at the side at ground level (3/4" IG), the hot water supply is located at the side at the top (3/4" IG). The maximum operating pressure is 6 bar and the maximum operating temperature is 90°C. If necessary, a pressure reducer valve as well as a filter should be integrated into the supply line.

The hot water tank must be completely filled prior to initial start-up. Ensure that a possibility for venting is provided (opening the hot water valve).

The PKOM⁴ hot water cylinder is fitted with a protective layer of enamel that protects the cylinder from corrosion. There is also a maintenance-free impressed current anode in the cylinder.

The water quality and the amount of dissolved potassium and magnesium salts vary depending on the region. Low hardness can lead to corrosive properties of the water, while high hardness can lead to limescale deposits on the heating element.

The following criteria for water quality must be met:
- Conductivity: Between 30 mS/m and 150 mS/m (millisiemens per metre) at a water temperature of 25 °C
- Chlorine content: Maximum 0.3 mg/L at a water temperature of 65 °C

5.8 SYSTEM OPERATION

Operation of the unit is exclusively permissible with a connected air duct or mounted system components such as silencers.

In the event of any errors or defects that can cause harm to persons or property, the system must be put out of operation immediately. Any further use must be actively prevented until the unit is fully repaired.

If there are signs of apparent damage on the unit or the corresponding installation parts, the heat pump combi unit must be switched off automatically and must be disconnected from the mains. Be aware of your safety and of hazards when opening the unit or removing cover plates. Any work practices that could potentially impair the safety of the unit are prohibited.

The heat pump combi unit may be operated only in accordance with the project documentation. which shall comply with the Equipment and Product Safety Act and the pertinent provisions of the EC Directives and Standards.

Consider environmental impacts and refrain from installing the heat pump combi unit in the vicinity of flammable liquids or gases, in swimming pools or in areas exposed to chemicals or hazardous substances.

Never operate the heat pump combi unit without an air filter. Air filters must be checked regularly for dirt and damage and replaced, if necessary. The air filters must be changed at least every six months or when the "Change Filter" message appears on the control unit. Use original replacement filters only. If the system is not used for an extended period, the air filters must, for hygienic reasons, be replaced prior to re-commissioning.

Health hazard by leaking refrigerant and refrigerator oil:
The unit is designed so as to ensure that the refrigerant will never come into contact with the drinking water, even if there is a leakage in the cooling circuit. In the case of leakages, however, refrigerant may enter the atmosphere.

- Gases or vapours, do not inhale.
- Avoid skin and eye contact.

Directly at the leakage point, refrigerant may cause local frostbite at the corresponding parts of the body. When working on the cooling circuit, protective gloves must be worn!

Assembly/Installation

6. Scope of supply, transport, storage and disposal

6.1 SCOPE OF SUPPLY

Scope of supply PKOM⁴ classic:

- The heat pump combi unit with an integrated hot water tank and electric heating element
- The control unit with TFT touch display
- ETA filter ISO ePM10 75 % (included in the unit)
- ODA filter ISO ePM1 55 % (included in the unit)
- The operating instructions for the user (available digitally)
- These installation instructions

Scope of supply PKOM⁴ trend:

- The heat pump combi unit
- included in the unit with TFT touch display
- ETA filter ISO ePM10 75 % (included in the unit)
- ODA filter ISO ePM1 55 % (included in the unit)
- The operating instructions for the user (available digitally)
- These installation instructions

On delivery of the unit, check that the type and serial number on the nameplate correspond with the information on the order and delivery documents, that the equipment is complete (optional accessories) and that all parts have been delivered in perfect condition.

Any transport damage and/or missing parts must be reported immediately in writing to the forwarder or supplier.

6.2 TRANSPORT AND PACKAGING

The PKOM⁴ heat pump combination unit is delivered with transport packaging on a pallet. The safety markings on the packaging must be observed. The device must not be damaged, tipped or knocked over during transport. Avoid impacts and shocks and observe the applicable safety and accident prevention regulations. The device may only be tilted by a maximum of 45° for a short time before being brought into the building.

Devices are secured on a pallet and can be transported with a forklift or pallet truck. The packaging and transport locks are designed for upright transport. If transported manually, ensure that necessary human lifting and carrying forces are reasonable.

PKOM⁴ classic
Dimensions of the packaging unit (W x H x D): 800 x 2150 x 1200 mm

Weight incl. packaging unit:
approx. 255 kg without optional accessorie-

sPKOM⁴ trend
Dimensions of the packaging unit (W x H x D): 800 x 1500 x 1200 mm

Weight incl. packaging unit:
approx. 155 kg without optional accessories

PKOM⁴ classic

PKOM⁴ trend

6.3 STORAGE

The unit must be stored in its packaging in suitable dry, dust-free rooms and protected from frost. Avoid storing for more than one year.

6.4 DISPOSAL

Dispose of the packaging material and protective packaging in an environmentally-friendly manner and in accordance with local regulations e.g. recycling of wooden pallets or cardboard packages.

Dispose of air filters via the residual waste collection. Equipment that is no longer functional must be disassembled by a specialised firm and properly disposed of at a suitable facility.

The waste electrical and electronic equipment ordinance (ElektroG), which provides for ratification of community law, directive 2011/65/EU (RoHS) and the directive 2012/19/EU (the WEEE directive) apply.

7. Product description

7.1 PKOM⁴ CLASSIC (RIGHT-HANDED VERSION)

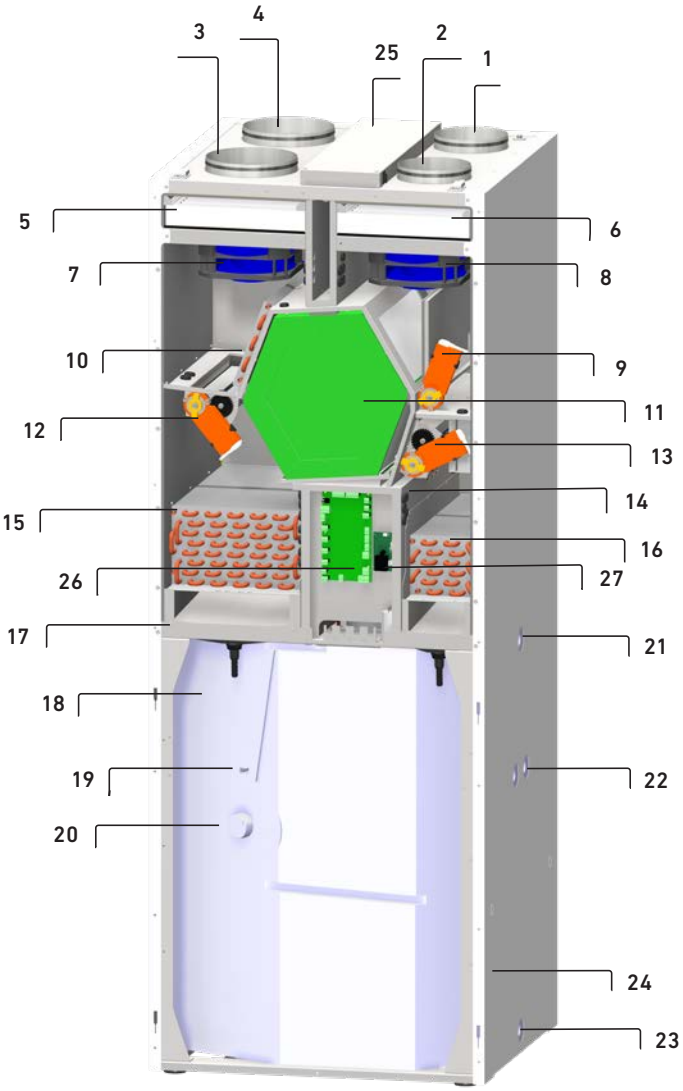

7.2 PKOM⁴ TREND (RIGHT-HANDED VERSION)

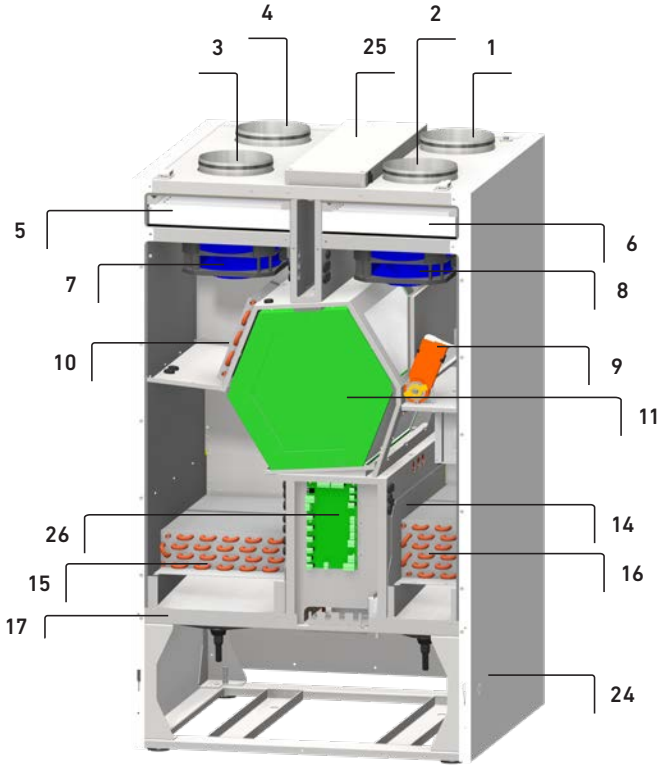

1 Supply air (SUP)
2 Extract air (ETA)
3 Outdoor air (ODA)
4 Exhaust air (EHA)
5 Filter ODA ISO ePM1 55%
6 Filter ETA ISO ePM10 75%
7 Outdoor air fan
8 Extract air fan
9 Bypass flap with servo motor
10 Pre-heater battery for outdoor air
11 Counterflow heat exchanger
12 ODA/EHA flap with servo motor
13 ODA/SUP flap with servo motor
14 Compressor in housing
15 Heat exchanger in exhaust air
16 Heat exchanger in supply air
17 Condensate tray
18 Household hot water tank
19 Impressed current anode
20 Electrical heating element with thermal cut-out
21 Hot water connection ¾"female pipe thread
22 Heating battery connection ¾"female pipe thread
23 Cold water connection ¾"female pipe thread
24 Condensate drain
25 Electrical connection box with main PCB
26 Heat pump PCB
27 Circuit board for impressed current anode

PATENT

AD ITEM 15
Patented dual-circuit heat pump system

- Enables particularly efficient operation
- Both heat pumps can be operated in parallel
- Increases the efficiency of the heat pump during base operation due to the large surface area and increases the seasonal performance factor and the *COP of both the domestic hot water and space heating heat pumps
- Enables particularly efficient cooling operation while simultaneously generating hot water
- The waste heat generated during cooling operation is recovered for domestic hot water heating

*) Coefficient of Performance

8. Layout sketch

8.1 PKOM⁴ CLASSIC (RIGHT-HANDED VERSION)

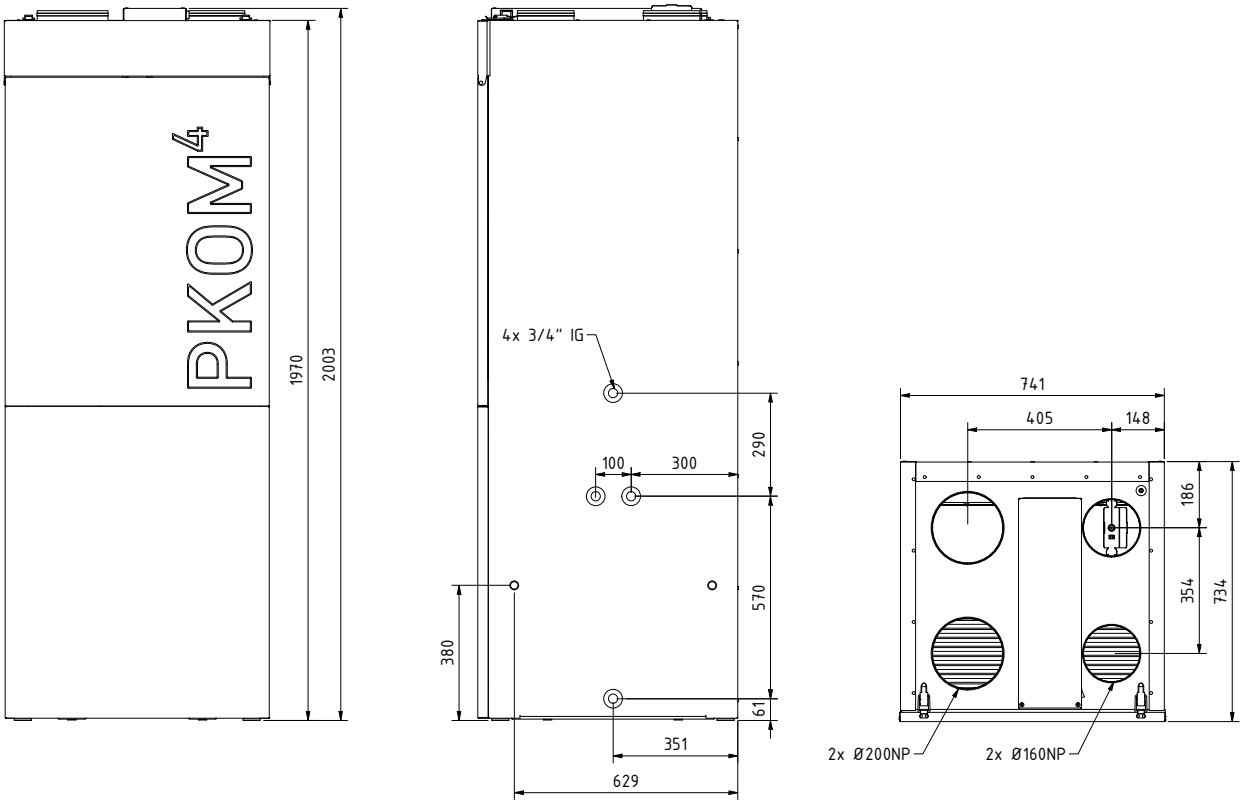

8.2 PKOM⁴ TREND (RIGHT-HANDED VERSION)

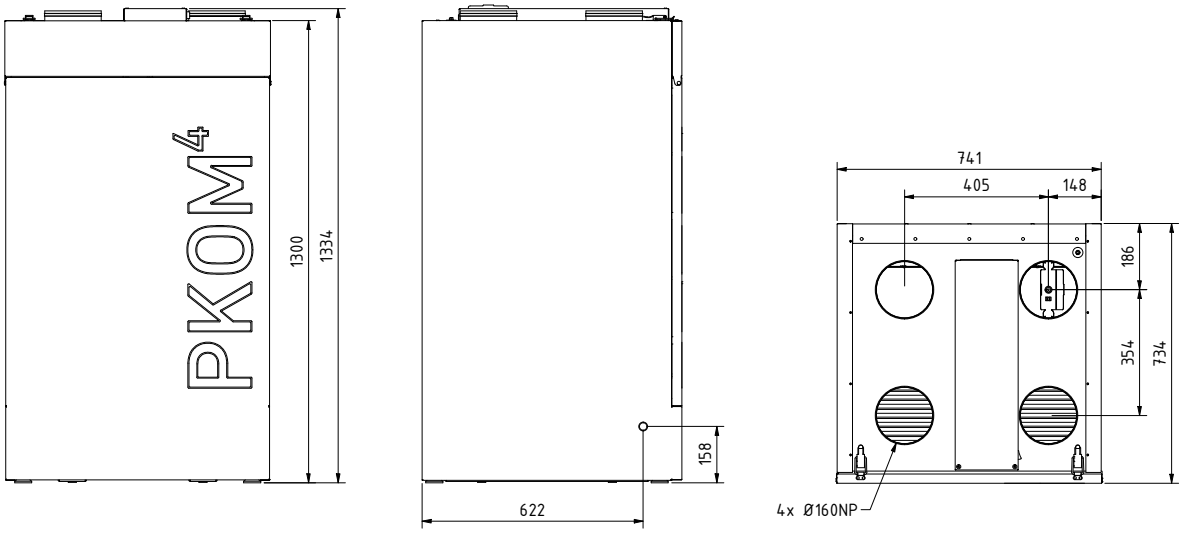

9. Setting up the device

A suitable area must be selected for the installation of the device and minimum distances for connection and maintenance work must be observed.

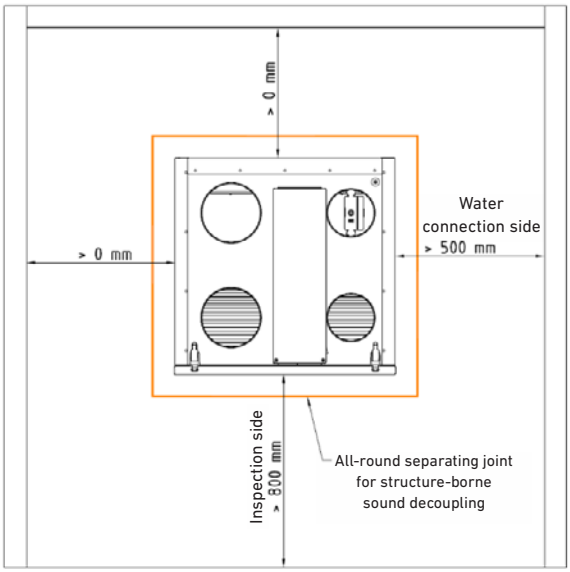

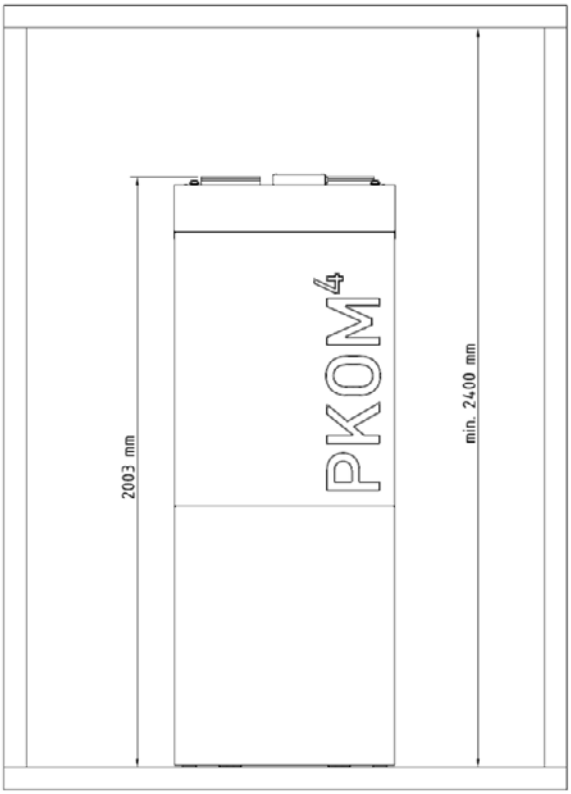

Illustration: PKOM⁴ classic, right version

Due to the refrigerant it contains, there must not be any ignition source, such as a gas boiler, in the installation room!

Minimum room space: The use of refrigerant R1234yf requires a volume of at least 2.35 m^3 in the room where the device is installed in order to meet the requirements of the EN 378 directive.

10. Air connections

10.1 DIMENSIONS

The diameter of the air pipes should be matched to the airflow required. If the pipe cross-section is too small, this leads to increased air velocity and can result in disruptive noise pollution.

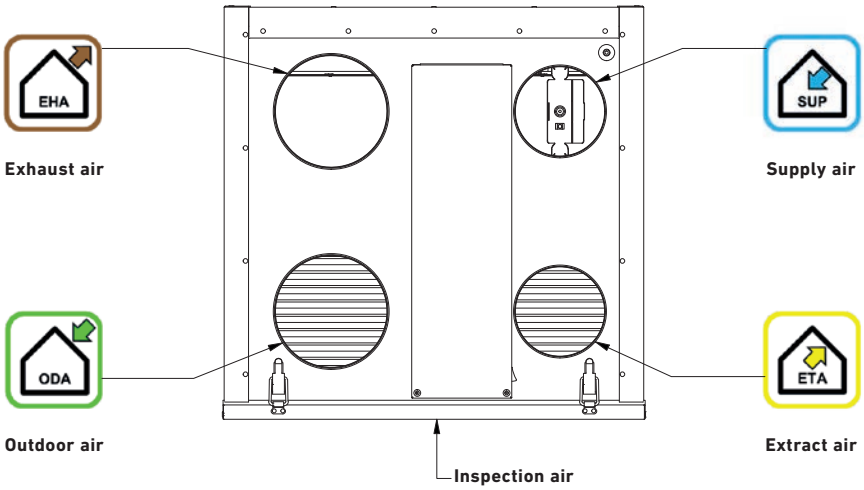

Illustration: PKOM⁴ classic, right version

	PKOM⁴ A classic	PKOM⁴ A trend
Outdoor air	Ø 200NP	Ø 160NP
Exhaust air	Ø 200NP	Ø 160NP
Supply air	Ø 160NP	Ø 160NP
Extract air	Ø 160NP	Ø 160NP

10.2 PRESSURE - FLOW RATE CHARACTERISTIC

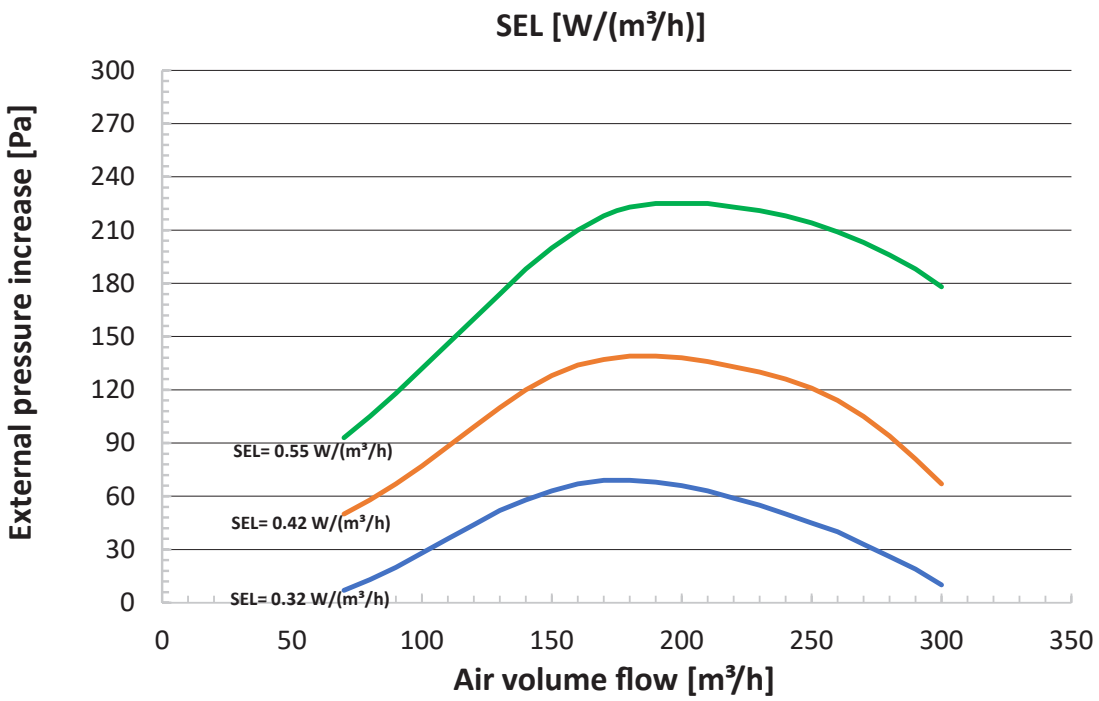

10.3 SOUND INSULATION

Suitable silencers with a sufficient attenuation level must be used. In addition, cross-talk sound attenuators can be used to prevent sound transmission between the individual rooms.

The acoustic measurements pursuant to EN 12102 refer to a maximum airflow of 250 m^3/h with 100 Pa external compression and activated heat pump.

	Midband frequency		Supply air inlet	Outdoor air connector	Extract air outlet	Exhaust air connector	Housing radiation
100 Pa	63 Hz	L_W	74,8	75,3	72,1	73,8	49,3
	125 Hz		46,4	67,9	66,2	52,0	55,1
	250 Hz		51,7	69,0	70,5	53,5	53,1
	500 Hz		43,6	56,6	58,2	45,1	40,1
	1000 Hz		33,9	52,8	56,6	40,4	35,1
	2000 Hz		25,6	53,4	52,3	27,2	30,4
	4000 Hz		14,9	43,5	47,2	14,1	24,2
	8000 Hz		1,2	26,8	33,9	1,5	19,8
	Total L_{WA} in dB (A)		**50,3**	**63,1**	**64,4**	**50,8**	**47,1**

Note: Tolerances +/- 2 dB for sound data

10.4 STRUCTURE-BORNE SOUND DECOUPLING

As with the device installation *(see section 9)* the air pipes must also be designed with structure-borne sound decoupling.

We recommend using suitable, decoupled suspensions for this purpose.

10.5 THERMAL INSULATION

The supply air temperature can reach up to 50 °C in heating mode and up to 15 °C in cooling mode. For this reason, all air pipes must be sufficiently thermally insulated (e.g. with EPDM). The thickness of the insulation depends on the ambient conditions of the PKOM⁴.

Insufficient thermal insulation can lead to high pipe losses and the formation of condensation in cooling mode.

The outdoor air and exhaust air must always be insulated (min. 40 mm EPDM)! Insulation of the supply and extract air is optional, but recommended.

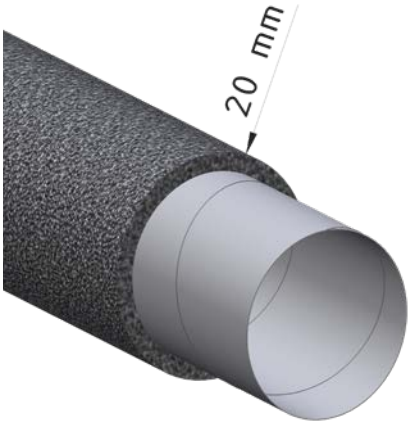

Insulation in heated rooms
Example: min. 20 mm EPDM

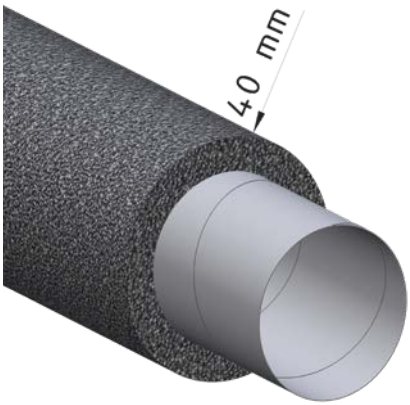

Insulation in unheated rooms
Example: min. 40 mm EPDM

10.6 FAÇADE CLADDING

Several types of external wall elements or weather protection grilles can be selected for the outdoor air intake or exhaust air discharge.

The following points must be observed:

• The diameter should always be larger than the pipe. This is usually 30% larger than the pipe diameter. However, the final diameter of the external grille should be determined by a qualified specialist in order to guarantee an adequate free cross-section.

• It is important to ensure that there is no short circuit between the air types (exhaust air is sucked back in with the outdoor air).

• The grille must not be installed in the main wind direction. It should also be positioned so that it cannot be hit by driving rain. Moreover, the weather protection grille must be positioned high enough to prevent contact with snow.

• Insect screens must not be used, as they can freeze if soiled

11. Domestic hot water (DHW) cylinder

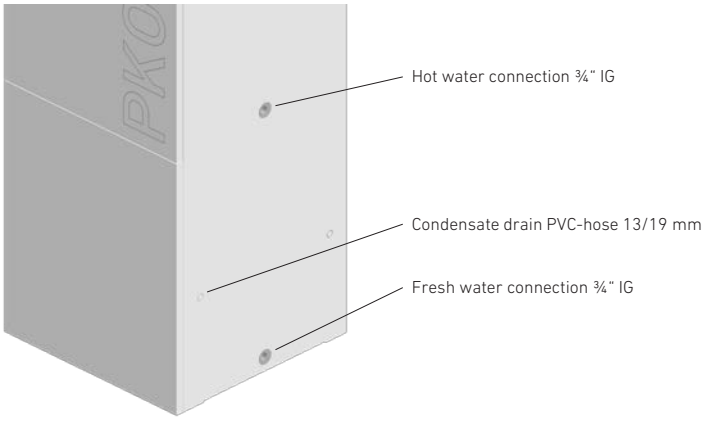

Illustration: Standard version

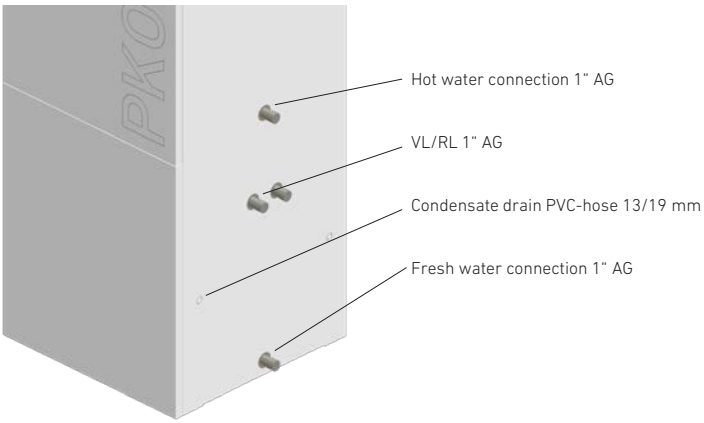

Illustration: Version with integrated heat exchanger

The hot water cylinder with a capacity of 220 litres (212 litres for the model with integrated heat exchanger) provides reliable and efficient domestic hot water heating. The enamel coating and the standard integrated impressed current anode ***(see section 13)*** protect the hot water cylinder against corrosion. The built-in heating cartridge can also be used to heat the water in case more hot water is temporarily required. Plus, the heating cartridge is used for legionella protection when it is activated. For this purpose, the water is heated to over 62 °C every 14 days. If the heat pump malfunctions, the heating cartridge can completely take over the water heating until the necessary repair work has been carried out.

The hot water cylinder must be fitted with a safety valve. Installation is carried out on site, as the type and correct installation may vary depending on national regulations.

In the case of high pressure in the fresh water pipe, a pressure reducer must be installed on site. The maximum operating pressure of the hot water cylinder is 6 bar.

12. Condensate connection

By cooling of the air in the evaporator, condensation water is separated. The condensate drain (diameter 20mm) is located at the side of the heat pump and must be routed away from the heat pump with a slope of at least 5°. Proper drainage of the condensate must be ensured in such a way that the condensate flow runs freely and drips directly into the siphon. Effective condensate drainage must be verified on-site prior to initial start-up and after servicing the unit.

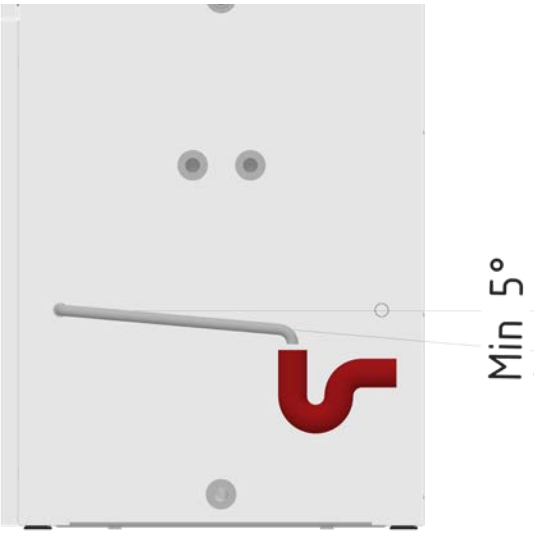

Condensate connection
PKOM⁴ classic

13. Impressed current anode

The hot water cylinder is fitted with an impressed current anode. Heat pumps with a serial number up to F2207XXXX are provided with a magnesium anode which, in accordance with the specifications of item 15.7 in this manual, must be inspected at regular intervals. Heat pumps with a serial number starting from F2208XXXX feature an impressed current anode which does not require regular maintenance and which, in the event of a fault, indicates this fault on the control panel or in the Pichler app.

To ensure proper functioning of the impressed current anode, the following safety instructions must be observed by the user:

1. Do not operate the hot water supply tank more than 2 months without withdrawing any water, otherwise disturbing gas accumulations may occur.
2. Do not disconnect the titanium anode from the power supply when the service water tank is filled, otherwise corrosion protection will be interrupted.
3. Under no circumstances disconnect the water pipes when the domestic hot water cylinder is full.
4. Do not take the impressed current anode out of operation, not even during longer standstill periods, e.g. holidays, without the withdrawal of water.
5. Only remove the connection line when the service water tank is empty.

14. Electrical connection

The performance of all electrical work requires compliance with the safety instructions provided under *section 5, item 5.5, "Electrical connections"*.

Electrical connection and work on electrical components may only be carried out by authorised electricians.

The relevant national and local regulations and standards must be complied with during assembly and electrical installation.

The design of the Heat pump combination unit complies with the safety requirements of the Equipment and Product Safety Act and the applicable provisions of the EC Directives.

- The electrical connection must be established in compliance with the corresponding wiring diagram! *(For more information on this subject, please see the respective wiring diagram in this section)*
- The cable cross-sections indicated are minimum cross-sections for copper lines and do not take the cable length or site conditions into account.
- Cable type, cable cross-sections and laying must be determined by an authorised electrician.
- Low-voltage cables must be laid separately from mains cables; alternatively, screened cables must be used.
- The pre-fuse of the supply line must have isolating characteristics.
- A separate cable inlet must be used for each cable.
- Unused cable inlets must be hermetically sealed.
- All cable entries must be strain-relieved.
- Potential equalisation must be put in place between the unit and the air duct system.
- All safety measures must be tested following electrical connection. (earth resistance, etc.)
- In order to prevent the activation of unsuitable residual current-operated protective devices, we expressly recommend the use of earth leaking circuit breakers that are sensitive to pulsating current or AC/DC sensitive (type B) with delayed tripping.

14.1 ELECTRICAL WIRING DIAGRAM VOLTAGE SUPPLY AND LAN CONNECTION

The heat pump combi unit is designed for a voltage supply of 230 V/ 50 Hz. Connection to the three-phase supply with 400 V/50 Hz is not intended.

The terminals for the voltage supply are located at the top of the unit in the electrical connection box *(see section 7, item 25).* Open the electrical connection box and establish the voltage supply in compliance with the following wiring diagram.

In order to connect the heat pump combi unit with the Internet and furthermore with the Pichler app or with Pichler Connect (remote maintenance) a LAN cable connection must be established.

A sticker is attached to the LAN sockets, which can be removed. When you remove this sticker and establish an Internet connection, we assume that you agree with our current privacy statement *(see: https://www.pichlerluft.at/datenschutz.html)*.

Once the connection work has been completed, the cables must be secured using appropriate strain relief

All earthing connections to the housing leads must be re-established.

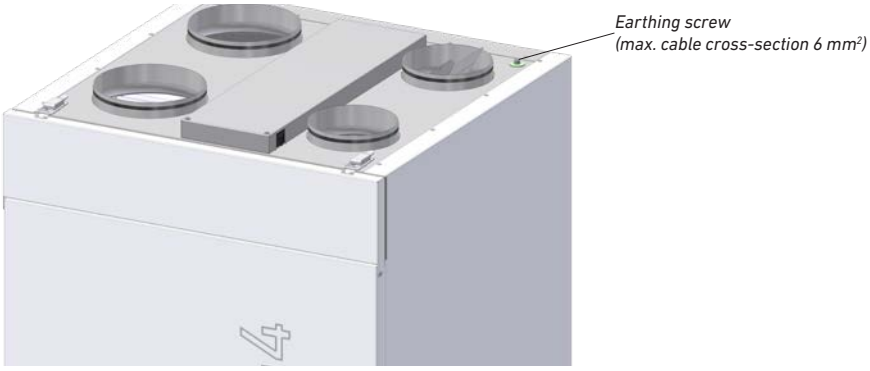

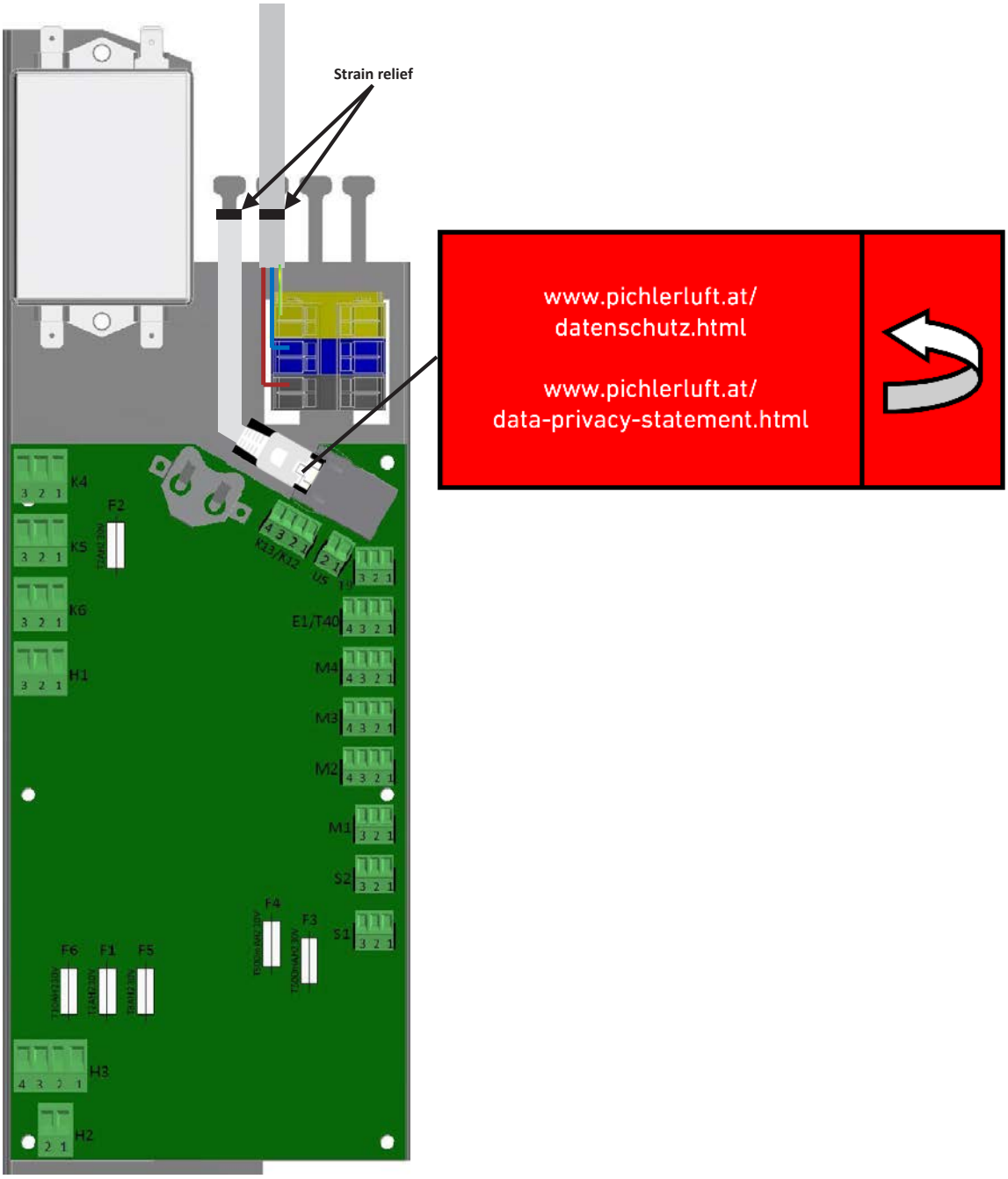

Illustration: Main board left version

14.2 FUSES

Only original fuses with the prescribed amperage and dimensions may be used. Positions of the fuses on the main board (*see section 14.5, "illustration of main board")..*

Fuse	Type	Fused circuit
F1	T2,5AH	L1 - 230VAC supply of ventilation board
F2	T1,6AH	K5 - 230VAC solar pump / heating circuit pump K4 – 230VAC relay of duct heating battery
F3	T500mAH	24VDC supply for B1 control unit, S1 humidity sensor, S2 CO_2 sensor
F4	T500mAH	24VDC supply for all boards
F5	T8AH	L3 – 230VAC supply heat pump hot water
F6	T10AH	L2 – 230VAC supply heat pump heating/cooling

14.3 DEVICE SWITCH

The device switch is located at the top of the unit, at the side of the electrical connection box *(see section 7 "Product description", position 25).*

Illustration: Device switch left version

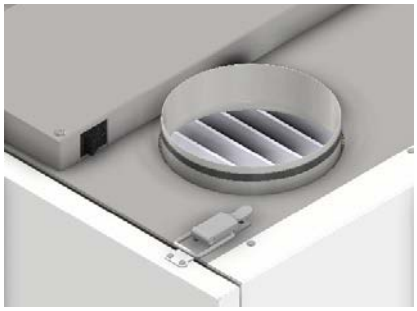

Illustration: Device switch right version

14.4 ELECTRICAL WIRING DIAGRAM TOUCH CONTROL UNIT

To always have the control and potential messages in view, the control unit should be installed centrally in the dwelling.

The temperature sensor is located on the underside of the control unit. To ensure accurate and conclusive temperature measurement, it is important to place the control unit in a location that:

- is not exposed to direct sunlight.
- is not located directly above or close to a source of heat (e.g. room heater).

Dimensions (W x H x D)	110 x 84 x 25 mm
Cable Telephone installation cable (max. Installation length < 100m)	J-Y(ST)Y 2x2x0.8

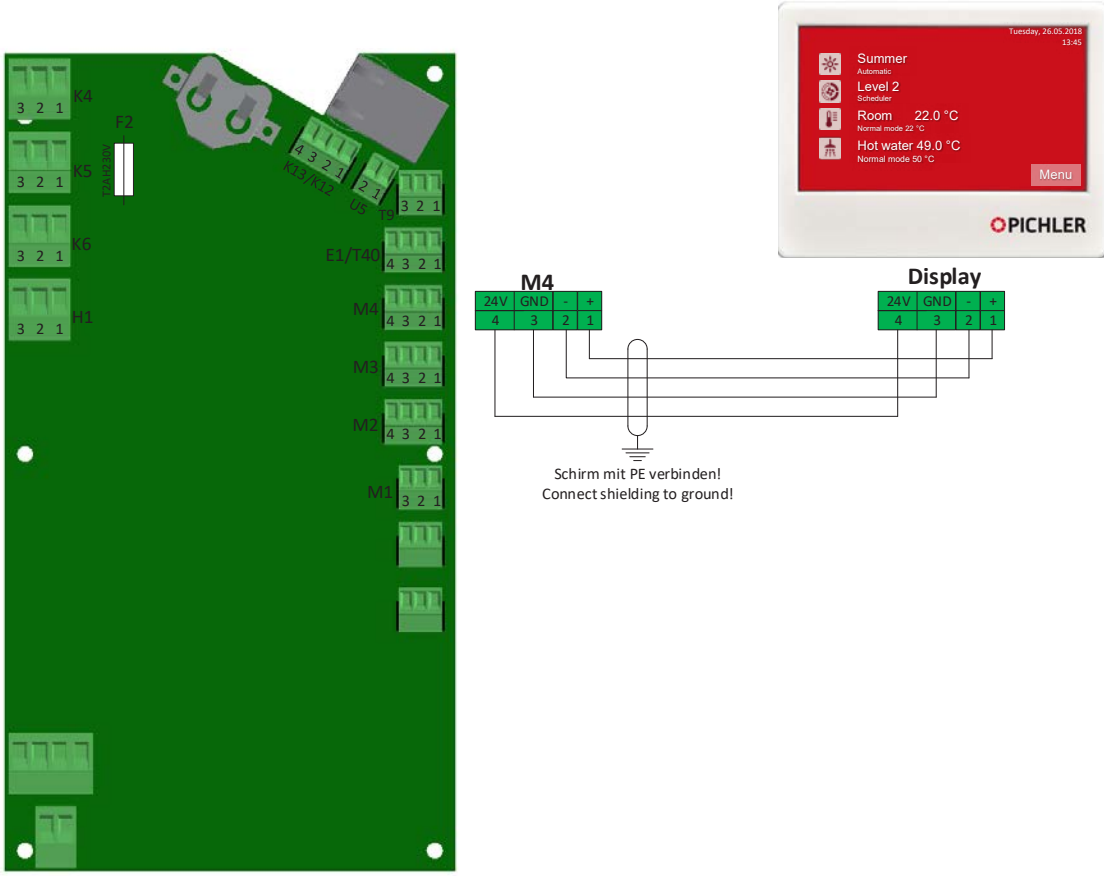

14.5 ELECTRICAL WIRING DIAGRAM MAIN BOARD

The main board is located at the top of the unit in the electrical connection box *(see section 7 "Product description", position 25).*

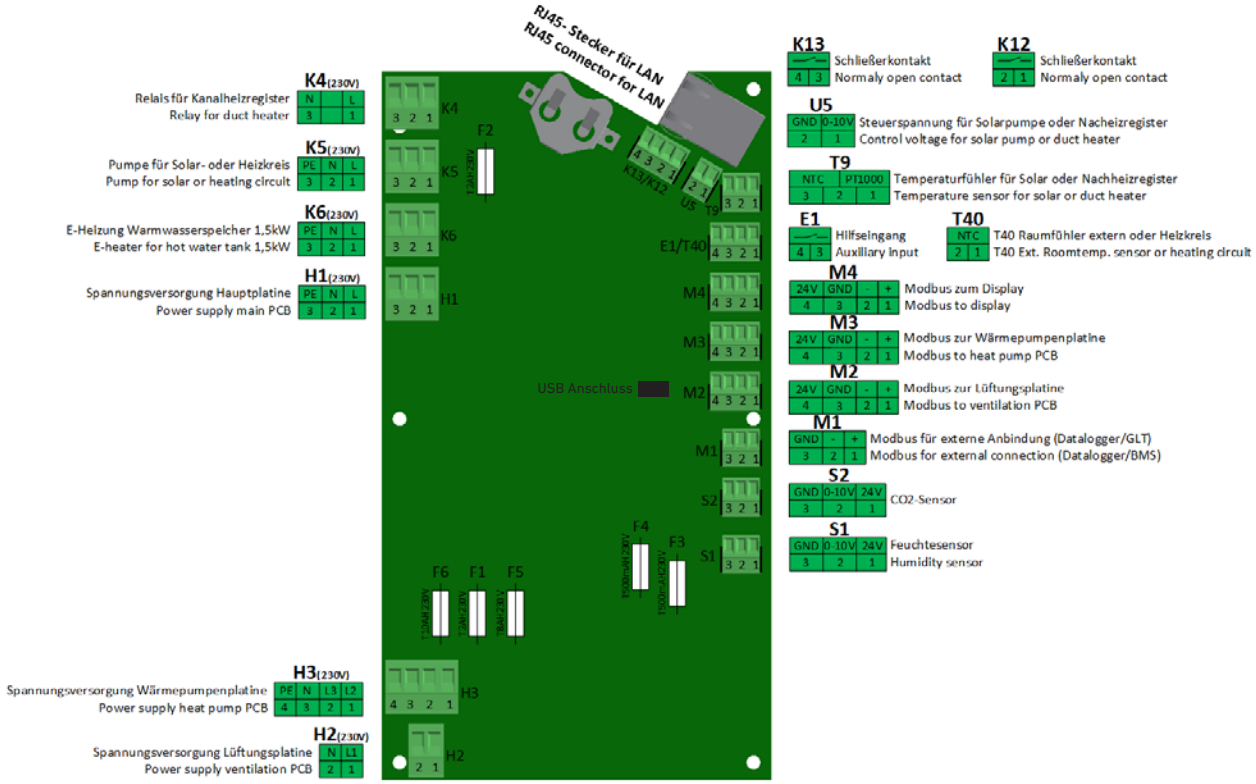

Illustration: Main board left/right version

14.6 ELECTRICAL WIRING DIAGRAM VENTILATION BOARD

The ventilation board is located at the top of the unit in the electrical connection box *(see section 7 "Product description", position 26*), upstream of the main board.

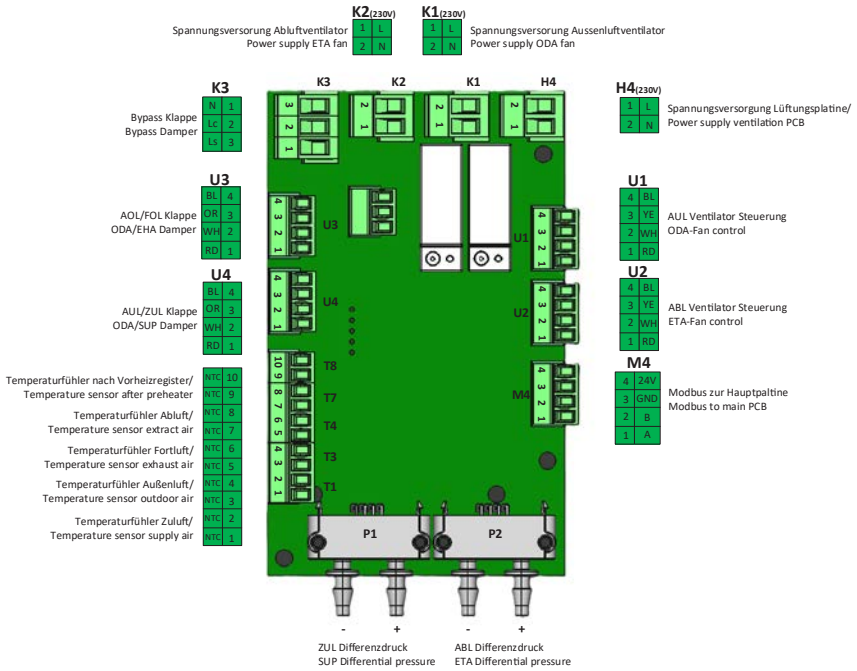

Illustration: Ventilation board left/right version

14.7 ELECTRICAL WIRING DIAGRAM HEAT PUMP BOARD

The heat pump board is located in the heat pump module *(see section 7 "Product description", position 26)*. No work has to be performed here in the course of the electrical connection.

Illustration: Heat pump board left/right version

14.8 ELECTRICAL CONNECTION PLAN – PCB FOR IMPRESSED CURRENT ANODE

The heat pump board is located in the heat pump module *(see section 7 "Product description", position 26)*. No work has to be performed here in the course of the electrical connection.

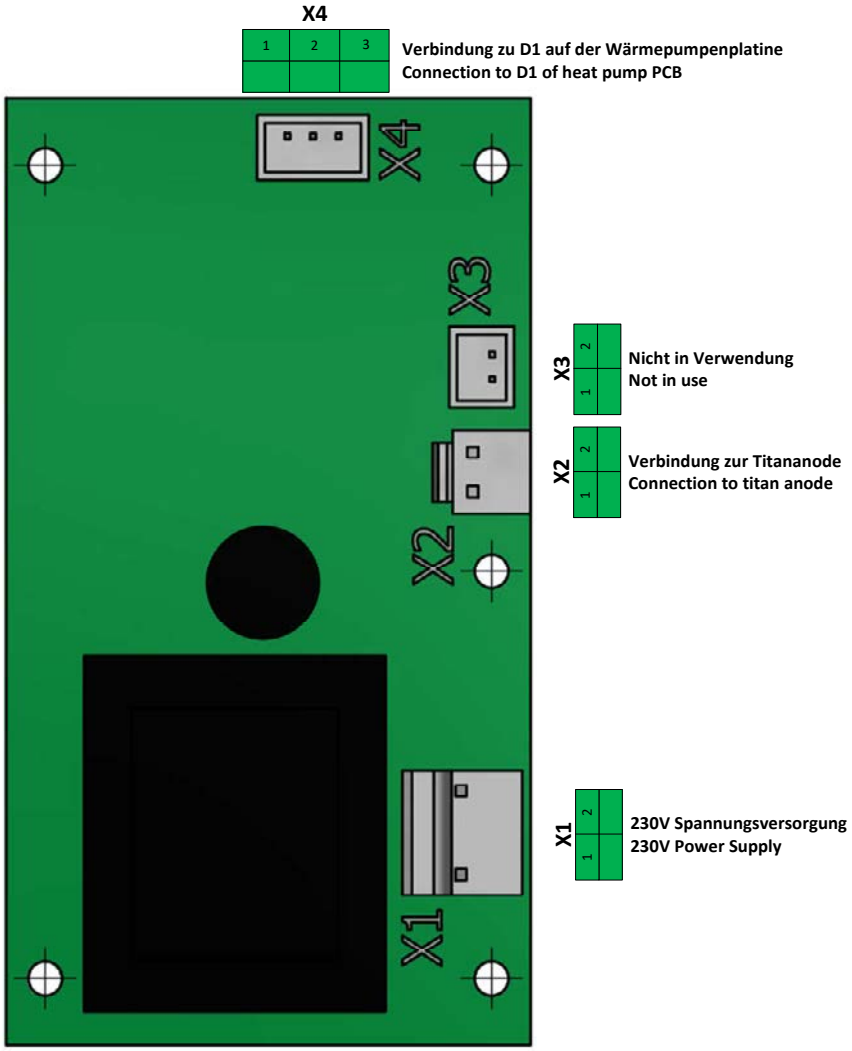

Illustration: PCB for impressed current anode left/right version

15. System description and extension options

15.1 FUNCTIONAL DIAGRAMS

The heat pump combi unit will already provide a passive house with a large part of its required heating and cooling power. Supplementary heating may be necessary during lengthy periods of negative outside temperatures.

The heat pump combi unit PKOM⁴ classic unites the four functions of ventilation, heating, cooling, and hot water production on an installation space of less than 0.75 m². The controlled housing ventilation permanently supplies the rooms with fresh and filtered air from the outside and ensures the hygienic exchange of air. The highly efficient heat recovery system is also optionally available as a design with recovery of waste air humidity. To prevent overly high summer temperatures in the living rooms, heat recovery may also be bypassed during cooler night hours by means of a bypass flap.

A controlled heat pump will in addition condition the supply air, i.e. heated or cooled on demand. Another heat pump is used for efficient provision of household hot water. Both heat pumps may be operated in parallel to ensure uninterrupted provision of air and water. An elaborate system provides for the provision of far more air via the evaporator in parallel operation, thus providing sufficient performance to both heat pump circuits.

15.1.1 Functional diagram PKOM⁴ classic

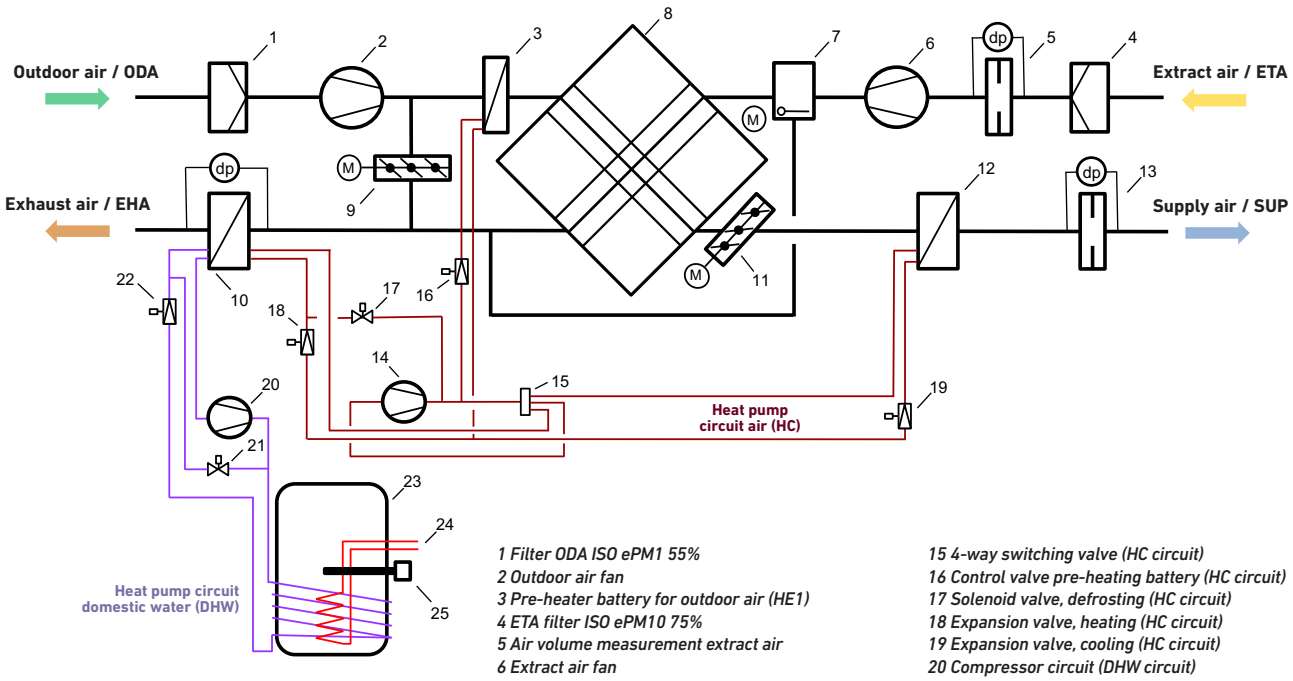

1 Filter ODA ISO ePM1 55%
2 Outdoor air fan
3 Pre-heater battery for outdoor air (HE1)
4 ETA filter ISO ePM10 75%
5 Air volume measurement extract air
6 Extract air fan
7 Bypass flap with servo motor
8 Counterflow heat exchanger
9 Outdoor air/exhaust air flap with servo motor
10 Heat exchanger in exhaust air (HE3)
11 Outdoor air/exhaust air flap with servo motor
12 Heat exchanger in supply air (HE2)
13 Air volume measurement, supply air
14 Compressor with frequency converter (HC circuit)
15 4-way switching valve (HC circuit)
16 Control valve pre-heating battery (HC circuit)
17 Solenoid valve, defrosting (HC circuit)
18 Expansion valve, heating (HC circuit)
19 Expansion valve, cooling (HC circuit)
20 Compressor circuit (DHW circuit)
21 Solenoid valve, defrosting (DHW circuit)
22 Expansion valve (DHW circuit)
23 Domestic hot water storage tank
24 Heating battery in domestic hot water storage tank
25 Electrical heating, domestic hot water

DHW = Circuit for domestic hot water
HC = Circuit for supply air (heating / cooling)

Advantage of the two heat pump circuits
The heat pump module consists of two separate heat pump circuits. One circuit (Heat pump circuit air, HK) heats or cools the supply air, the other circuit heats the hot water in the tank (Heat pump circuit domestic water, BW). The special characteristic is that the heat exchanger has been designed as a two-circuit heat exchanger. This means that both heat pump circuits use the same heat exchanger, the duct rows of the heat exchanger, however, are distributed to two circuits. If only one heat pump circuit is running, therefore the double heat exchanging surface is provided. If both heat pump circuits are running, the air throughput through the heat exchanger is increased so that both circuits receive sufficient performance. This technology makes it possible to heat up the supply air and the hot water at the same time.

In simple heating or cooling operation the air flap between the outdoor air and the exhaust air remains shut and the fans exactly convey the air volume flow which is required for attaining the heating or cooling performance. In heating operation the heat exchanger in the exhaust air serves as an evaporator of the heat pump circuit and extracts energy from the exhaust air. Via the heat exchanger in the supply air, heating energy is fed to the supply air. In cooling operation the heat pump circuit is reversed and the supply air is cooled while the exhaust air is heated.

If, during heating operation, the second heat pump is now also required for heating the hot water, the air flap will open, the air flow of the outdoor air being divided. One part is still guided through the heat recovery unit and flows into the living spaces as supply air, the other part flows directly into the exhaust air section and mixes with the air extracted from the extract air sections. In this mode, the external fan is actuated at a higher speed and the air flow is substantially increased. The air volume flow into the supply air sections remains constant, the air flow via the heat exchanger in the exhaust air, however, now has sufficient performance to supply both heat pump circuits. The air valves are continuously regulated so as to ensure the desired supply air volume.

15.1.2 Functional diagram PKOM⁴ trend

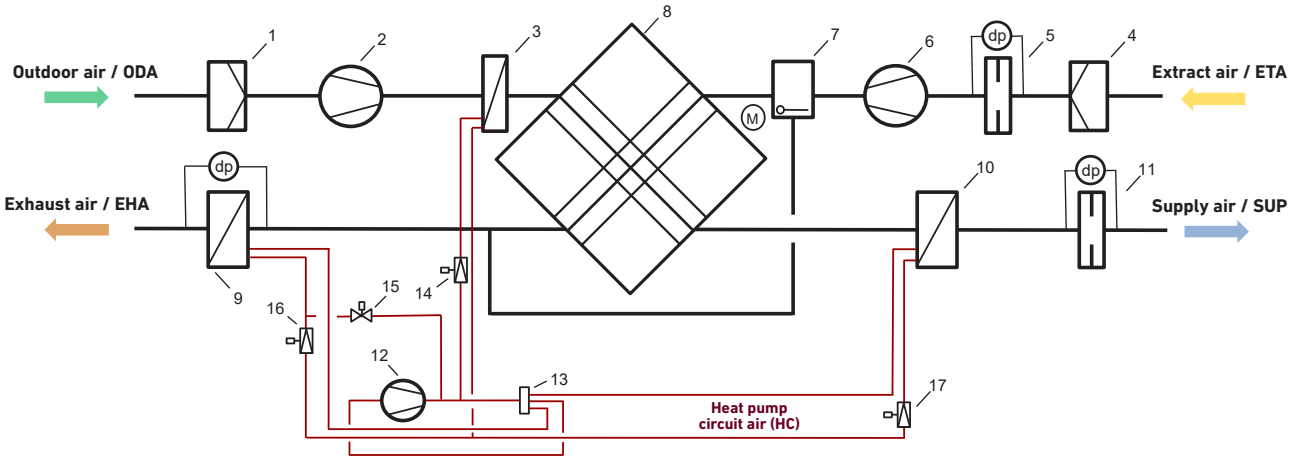

1 Filter ODA ISO ePM1 55%
2 Outdoor air fan
3 Pre-heater battery for outdoor air (HE1)
4 ETA filter ISO ePM10 75%
5 Air volume measurement extract air
6 Extract air fan
7 Bypass flap with servo motor
8 Counterflow heat exchanger
9 Outdoor air/exhaust air flap with servo motor
10 Heat exchanger in exhaust air (HE3)
11 Outdoor air/exhaust air flap with servo motor
12 Heat exchanger in supply air (HE2)
13 Air volume measurement, supply air
14 Compressor with frequency converter (HC circuit)
15 4-way switching valve (HC circuit)
16 Control valve pre-heating battery (HC circuit)
17 Solenoid valve, defrosting (HC circuit)

HC = Circuit for supply air (heating / cooling)

15.2 FROST PROTECTION OPTIONS

There is a risk of the heat exchanger freezing on the exhaust air side, particularly during winter months with moderate to severe frost, depending on the extract air temperature and air humidity. Appropriate measures must be taken to protect the heat exchanger against ice formation at low outdoor air temperatures.
Various systems are available to monitor defrosting of the heat exchanger. Possible strategies to protect the heat exchanger against freezing are outlined below.

15.2.1 Hot gas pre-heating battery

The standard configuration of heat pump combi units is with a hot gas pre-heating battery. This is positioned in front of the fresh air that enters the counterflow exchanger. A temperature sensor between the hot gas pre-heating battery and the counterflow heat exchanger monitors the temperature of the fresh air that flows in. If this temperature is lower than the defined minimum temperature, the fresh air will be pre-heated by routing hot gas from heat exchanger circulation HK through the pre-heating battery.

Pre-heating fresh air via the heat pump will reduce the available supply air heating capacity. The shortfall in heating energy must be provided through external means.

15.2.2 Geothermal heat exchanger

Very efficient frost protection can be achieved by integrating a geothermal heat exchanger into the ventilation system.

The following information must be observed for execution of a geothermal heat exchanger:

- The heat exchanger is laid in the ground with waterproof pipes at a frost-free depth with due consideration of the system's cleanability options.
- The manufacturer's guidelines for implementation must be observed.
- Condensate drainage must be provided.
- If the air pipe is routed through an external wall, effective sealing against moisture ingress must be ensured.
- To avoid frost damage, lay to ensure adequate spacing from other structural components such as water pipes, foundations, etc.
- Do not use geothermal heat exchangers if the soil is contaminated.
- To ensure energy efficiency and air hygiene, geothermal heat exchangers must be carefully planned and implemented.

15.3 CONVENIENT OPERATION USING THE PICHLER APP & PICHLER CONNECT

User-friendly: the heat pump combi unit can be operated easily with our free smartphone app for Android and iOS, whether you are at home or out and about:

GET IT ON Google Play

Download on the App Store

15.4 REMOTE ACCESS / PICHLER CONNECT

Operational safety: Remote access allows the Pichler customer service to respond quickly and easily in the event of faults.

PICHLER *connect.*

15.5 DATA PROTECTION

A sticker is attached to the LAN sockets, which can be removed. When you remove this sticker and establish an Internet cable connection, we assume that you agree with our current privacy statement *(see: https://www.pichlerluft.at/datenschutz.html).*

www.pichlerluft.at/datenschutz.html

www.pichlerluft.at/data-privacy-statement.html

16. Extension options

16.1 ACCESS TO SERVICE MENU

Logging in as a service technician

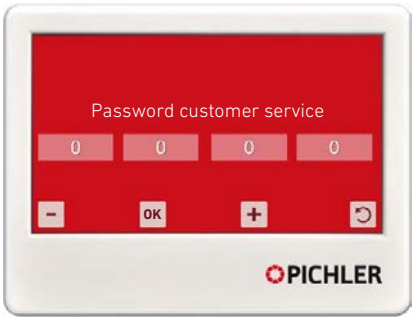

Tap on the service icon

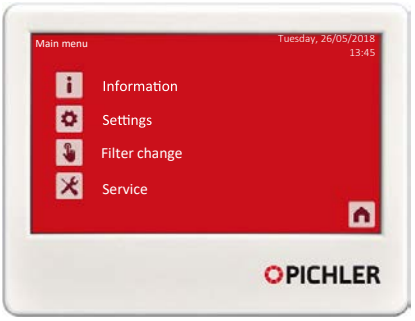

Tap on „Settings“

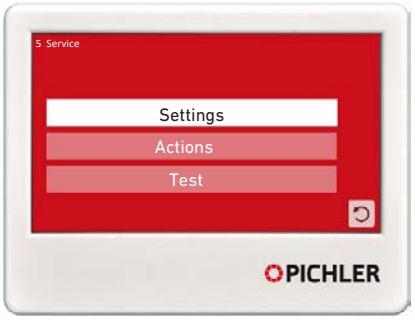

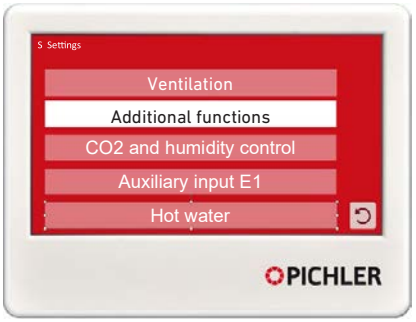

16.2 EXTERNAL ELECTRIC HEATING BATTERY

The external electric heating battery / duct heater is installed into the supply air duct directly downstream of the heat pump. Should the heat pump not be able to supply the supply air at the required temperature, the duct heater will switch on automatically. The heating power will in this case be continuously controlled up to 1.200 W heating (greater power on request).

This additional function requires an external temperature sensor in the air duct downstream of the duct heater, connected to the main PC board.

Observe the maximum electrical load. Duct heaters must be supplied and fused separately.

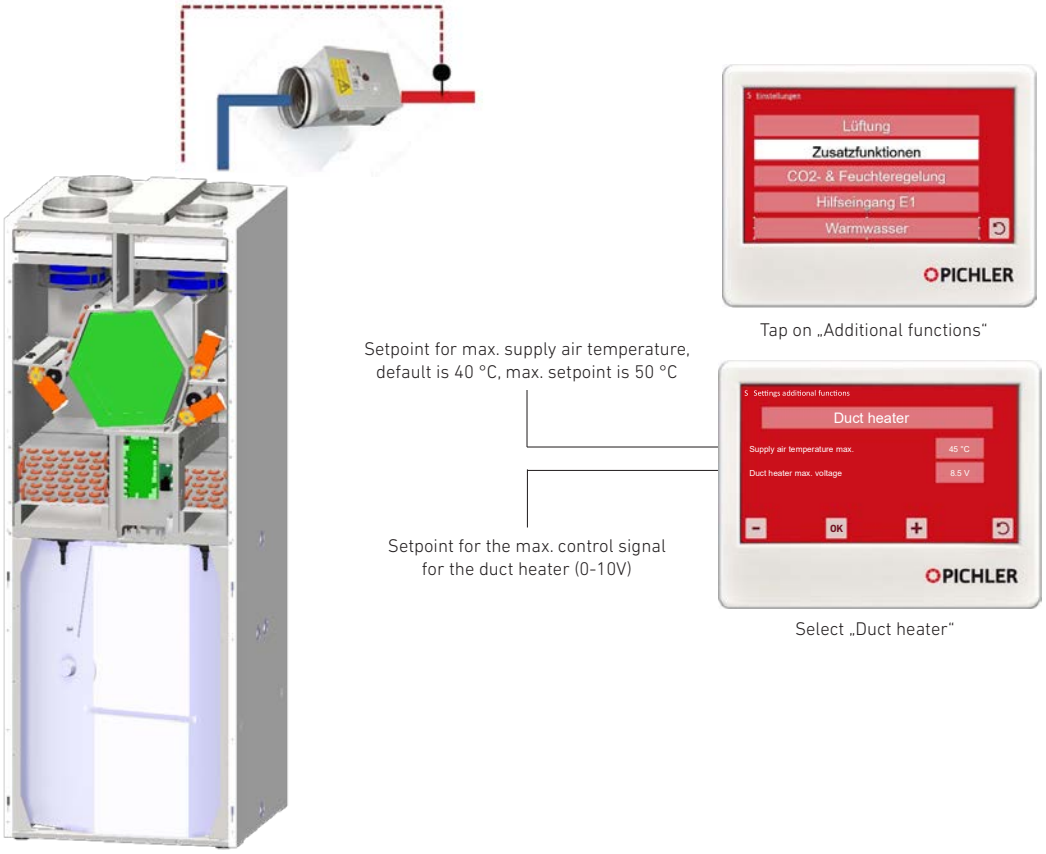

Illustration: Assembly situation

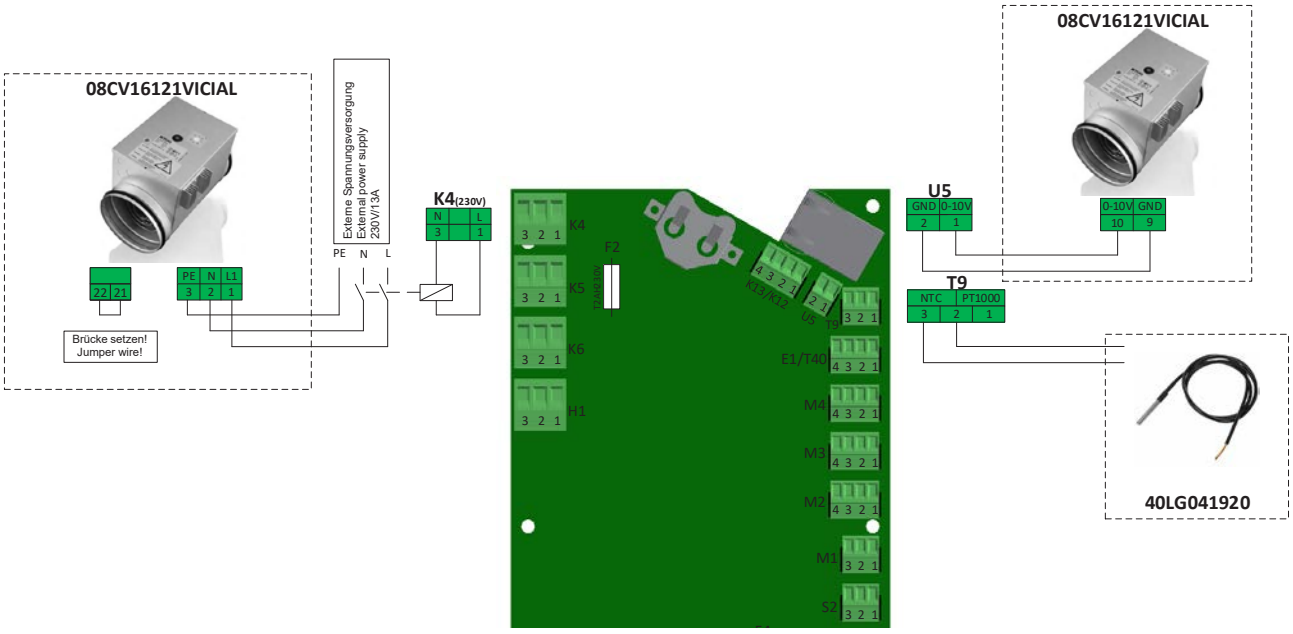

Illustration: Electrical connection of main board

16.3 HEATING CIRCUIT

The heating circuit module allows for the connection of a small, water-controlled heating circuit (e.g. underfloor heating in the bathroom, towel dryer, etc.) up to a max. heat consumption of 300 watts. The module is connected to the heating battery of the service water tank. The room temperature sensor records the room temperature in the area in which the heating circuit is installed. For this room, an individual temperature setpoint can be specified on the control unit.

As an alternative, instead of the heating circuit, an electrical additional heating (IR panel, electric underfloor heating. electric radiator, etc.) can also be activated via this function by means of an external relay.

Observe the maximum electrical load. Electric radiators must be supplied and fused separately.

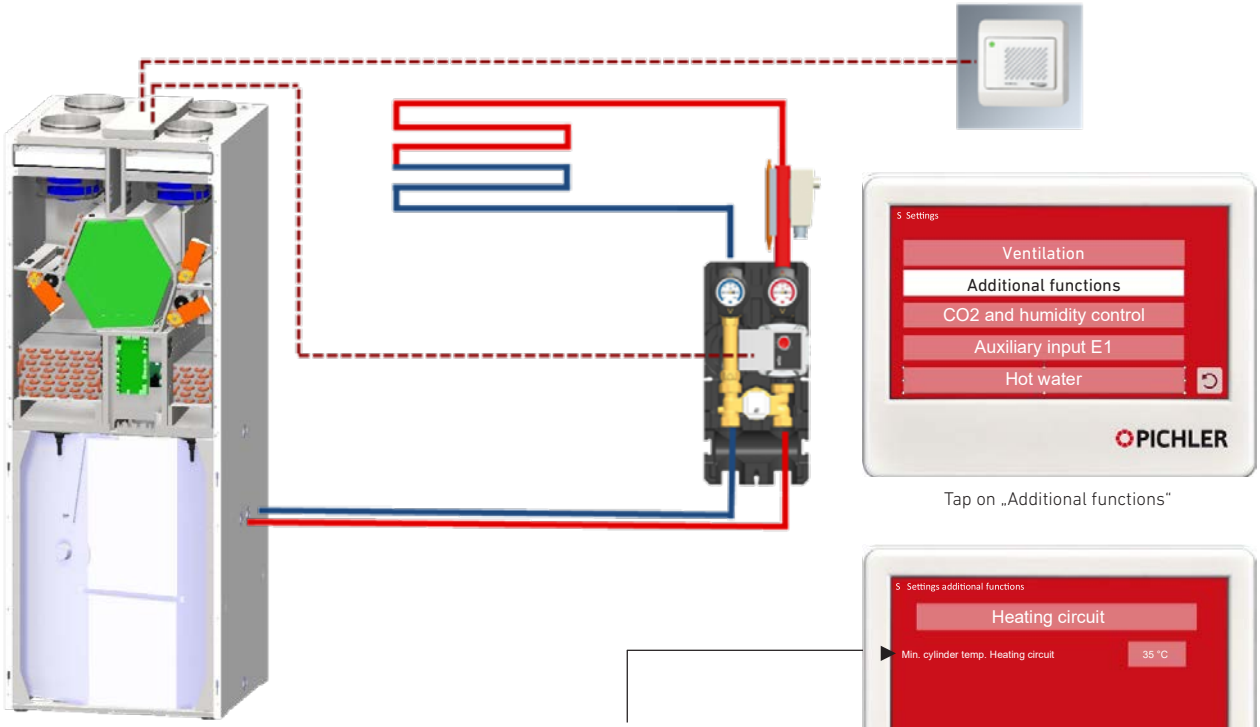

Illustration: Assembly situation

Tap on „Additional functions"

Setpoint for the min. cylinder temperature for enabling the heating circuit

Select „Heating circuit"

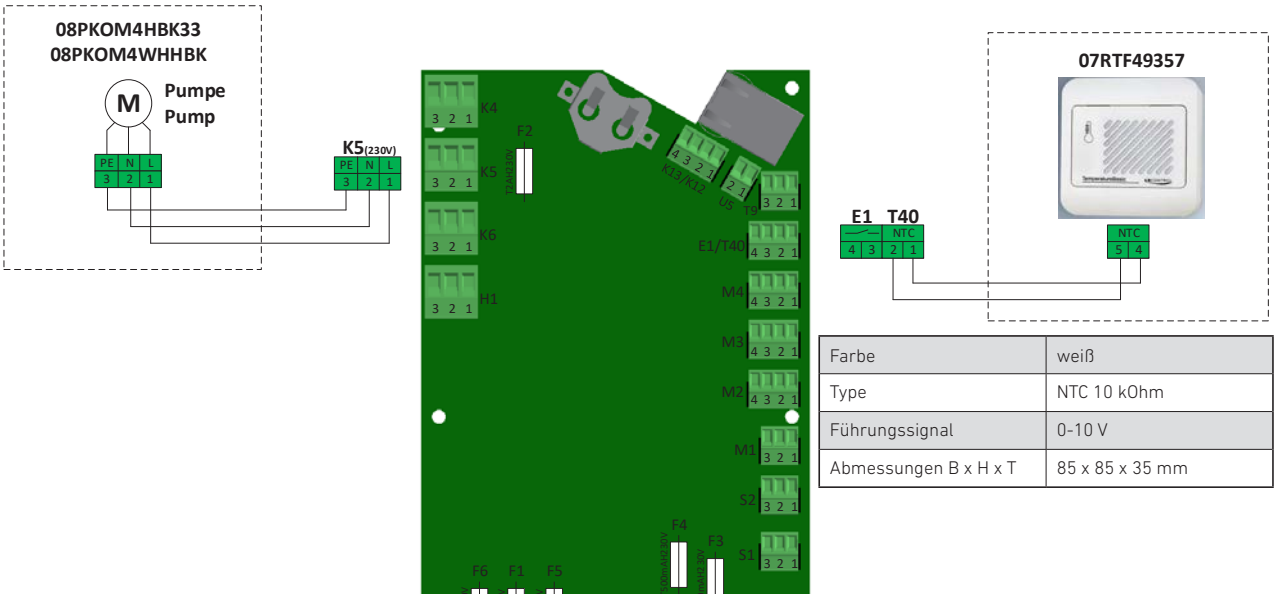

Farbe	weiß
Type	NTC 10 kOhm
Führungssignal	0-10 V
Abmessungen B x H x T	85 x 85 x 35 mm

Abbildung: Elektrischer Anschluss an der Hauptplatine

16.4 SOLAR THERMAL ENERGY

he heating battery of the hot water tank has a surface area of 0.8 m^2 and allows for the connection of a solar system and therefore of a further regenerative energy source. The collector field should be dimensioned appropriately to ensure perfect operation.

The solar control is already integrated into the heat pump combi unit. The collector sensor and the solar pump are connected directly to the main board. The pump is controlled via a 0-10 V signal.

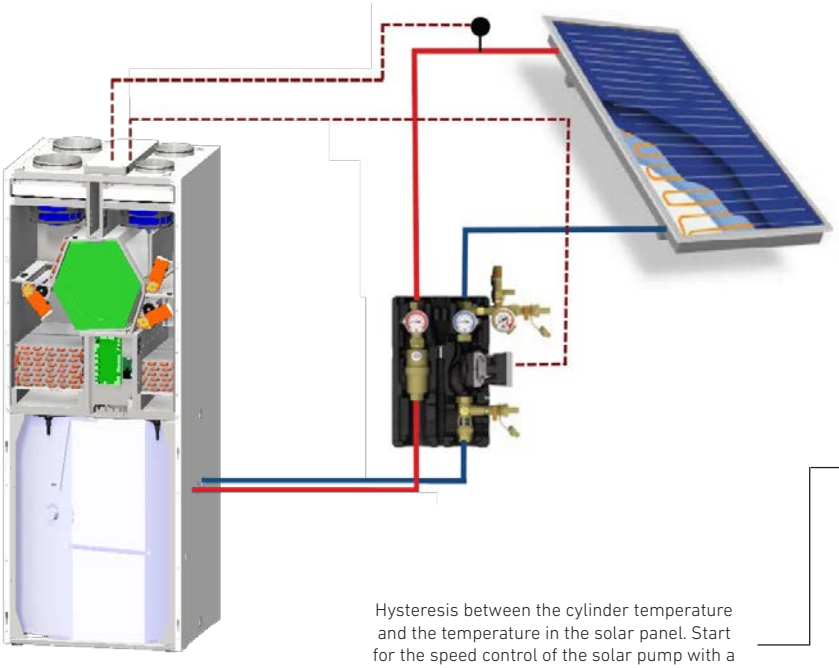

Illustration: Assembly situation

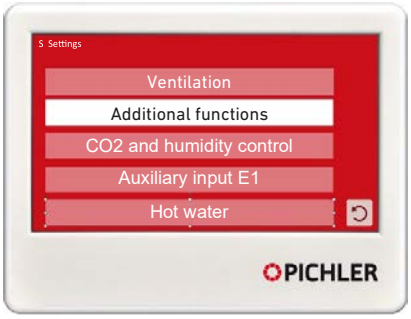

Tap on „Additional functions"

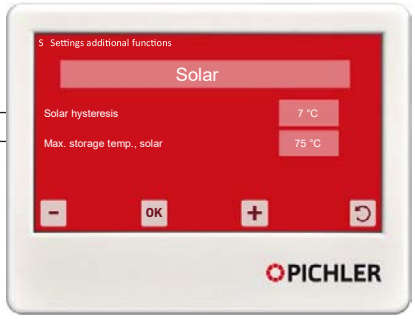

Select „Solar"

Hysteresis between the cylinder temperature and the temperature in the solar panel. Start for the speed control of the solar pump with a 0-10V signal

Setpoint for the cylinder temperature in solar mode

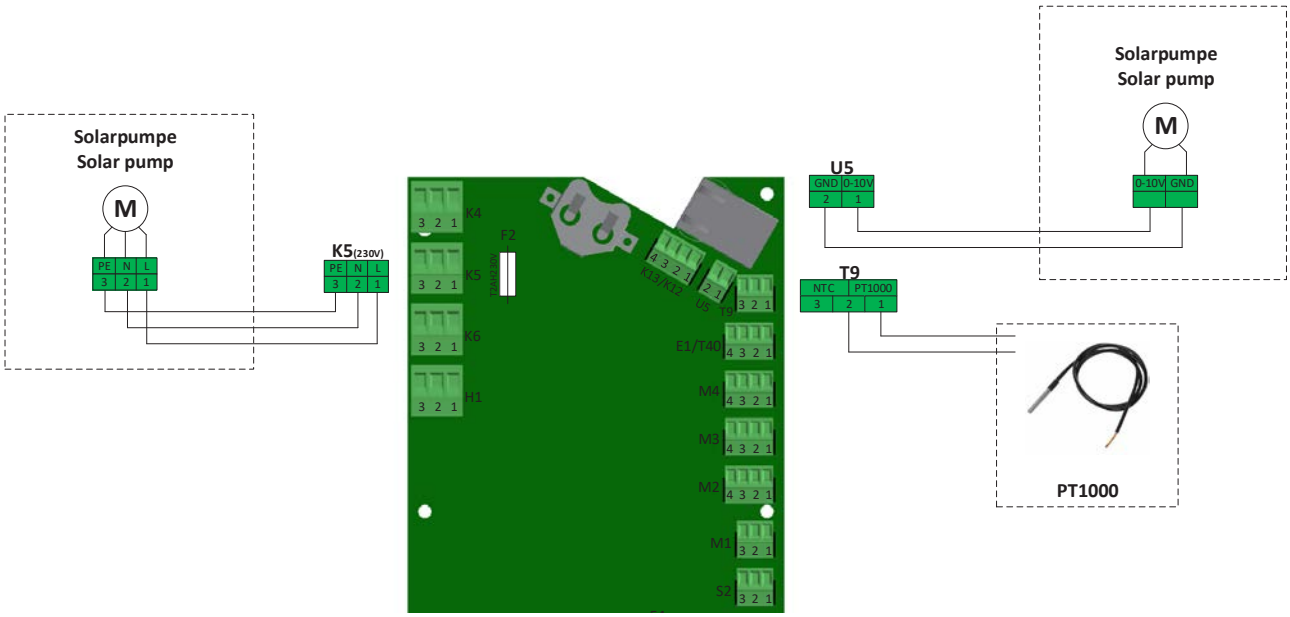

Illustration: Electrical connection of main board

16.5 DEMAND-DRIVEN CONTROL OF THE AIR VOLUMES

The air volume flow can be either defined manually or controlled via a scheduler. Up to two different additional sensors may be optionally installed for demand-driven control.

16.5.1 CO_2 sensor

Air volume flows are generally specified via the values selected in the scheduler or via manually selected values. If a CO_2 sensor is configured via the data logger, the air volumes are increased automatically as soon as the preset CO_2 threshold value is exceeded (default setting 1000 ppm).

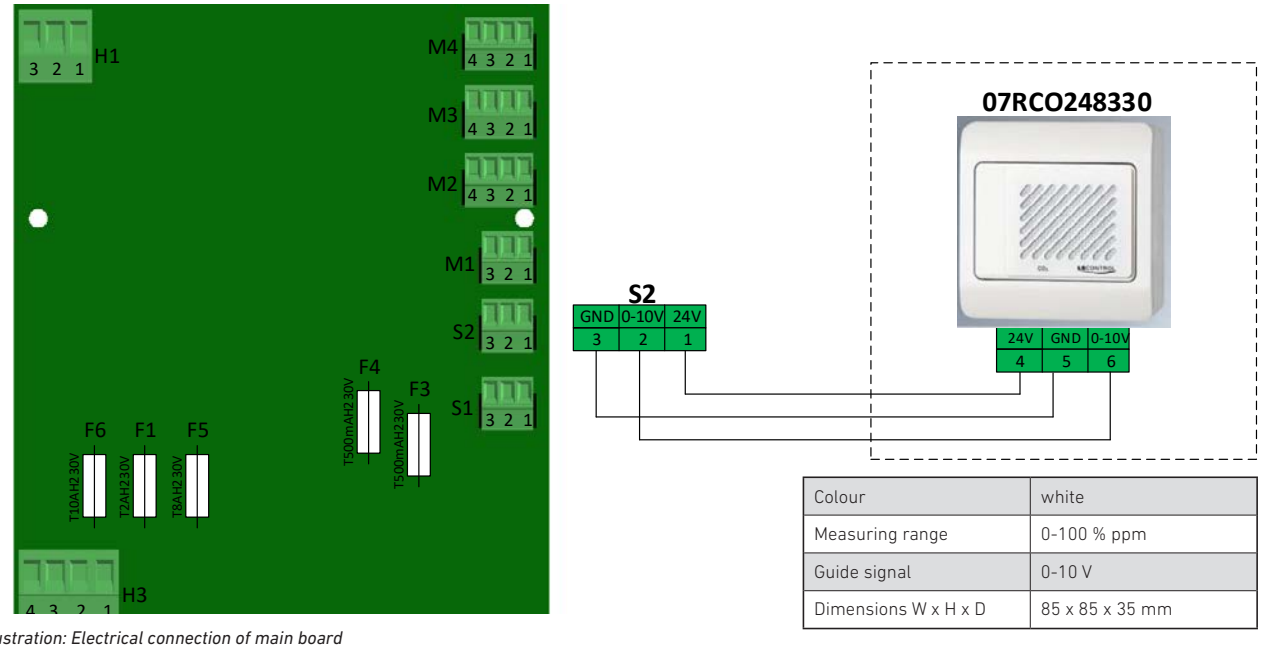

Colour	white
Measuring range	0-100 % ppm
Guide signal	0-10 V
Dimensions W x H x D	85 x 85 x 35 mm

Illustration: Electrical connection of main board

16.5.2 Humidity sensor

Air volume flows are generally specified via the values selected in the scheduler or via manually selected values. If a humidity sensor is configured via the data logger, the air volumes are automatically increased when the preset maximum relative humidity is exceeded, and they are automatically reduced if the value falls below the preset minimum relative humidity. (Default setting min. 30 %, max. 60 %).

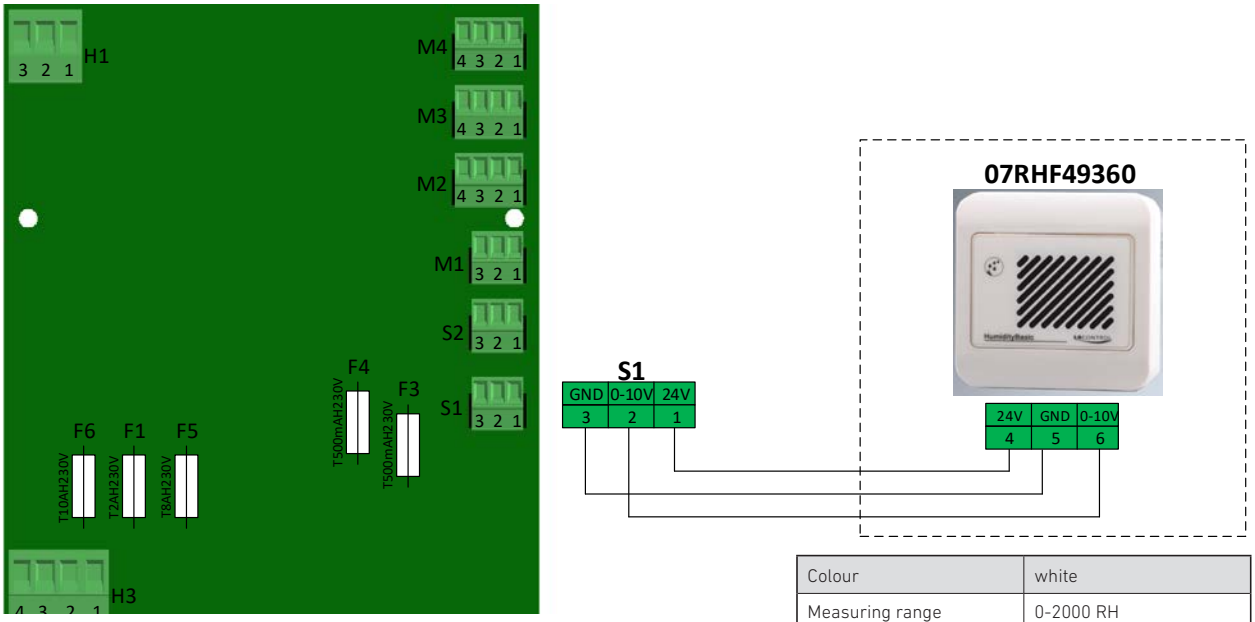

Colour	white
Measuring range	0-2000 RH
Guide signal	0-10 V
Dimensions W x H x D	85 x 85 x 35 mm

Illustration: Electrical connection of main board

16.5.3 Initial operation via control panel

Once the humidity or CO2-sensor has been electrically connected, it must be activated via the control panel.

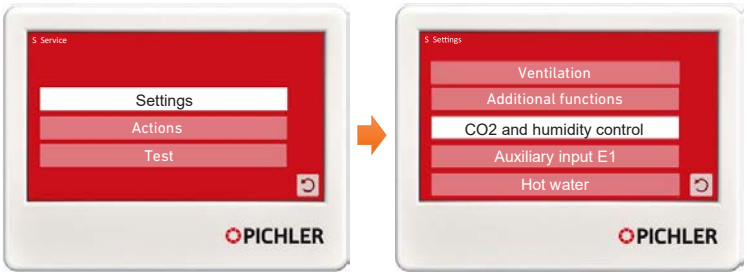

Tap on „Settings“ Tap on „CO2 and Humidity control“

The sensors can be operated individually or simultaneously.

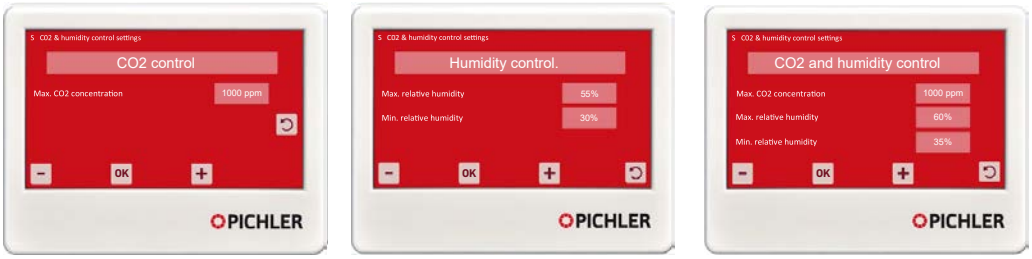

16.5.4 Additional function via E1 contact

Depending on the device configuration that is carried out by the specialist/installer during commissioning, the following functions can be assigned to digital input E1:

External off
This configuration makes it possible to switch off the heat pump combi unit by opening an NC contact, e.g. via a central fire alarm system, pressure box, etc.

ECO mode
Eco mode allows for a higher inherent power consumption of the photovoltaic system. The operating mode is activated via a digital input signal. This signal is provided either directly by the inverter or by an energy management system.

The setpoint for hot water is increased to a higher level (default setting 75 °C). This means that the excess current is buffered as heat in the hot water tank.

The heat pump heats the hot water up to max. 55 °C, the remaining heating power is supplied by the electric heating element.

A further option is provided by the possibility of only enabling active cooling in the Eco mode. This means that cooling by means of the heat pump is only carried out if there is excess energy.

Shock ventilation
This function requires the use of a pushbutton, giving the E1 contact a pulse for starting shock ventilation. For the time defined (default setting 60 min.) the heat pump combi unit runs on ventilation level 4.

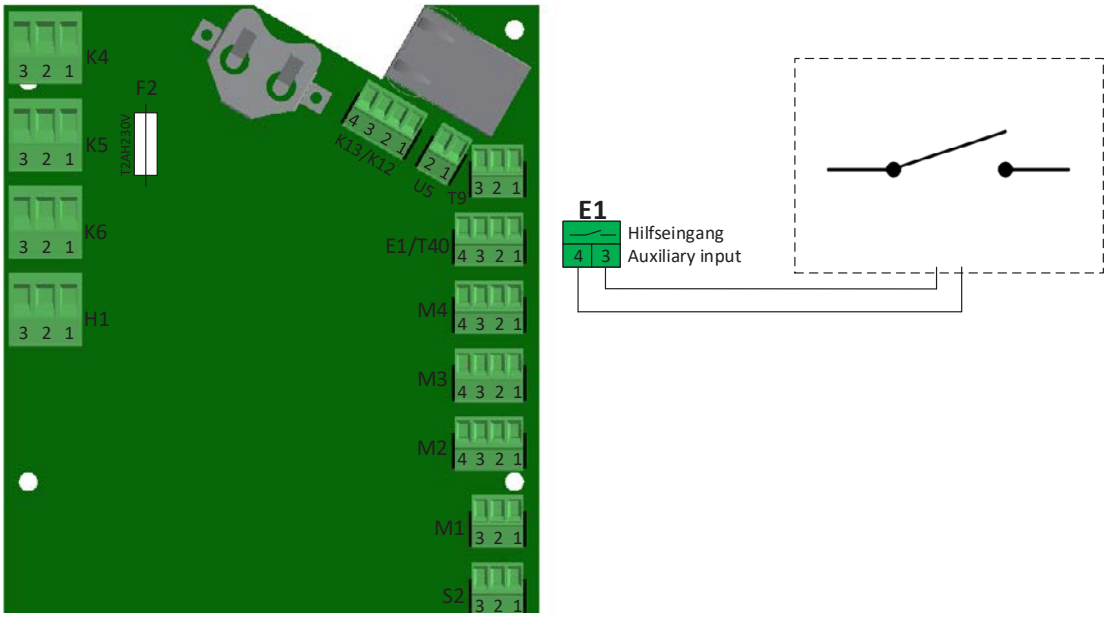

Illustration: Electrical connection of main board

16.5.5 KNX gateway

The Modbus / KNX gateway allows for the connection of the heat pump combi unit PKOM⁴ to a KNX bus system. In this process, the gateway serves as a connective link between the two bus systems. It is provided with a Modbus RTU and TCP interface and is always the master on the Modbus. On the KNX side, however, it responds like a common KNX TP-1 unit. This makes it possible to centrally control and monitor the ventilation unit by a KNX system. The configuration is implemented via the IP or USB interface of the gateway.

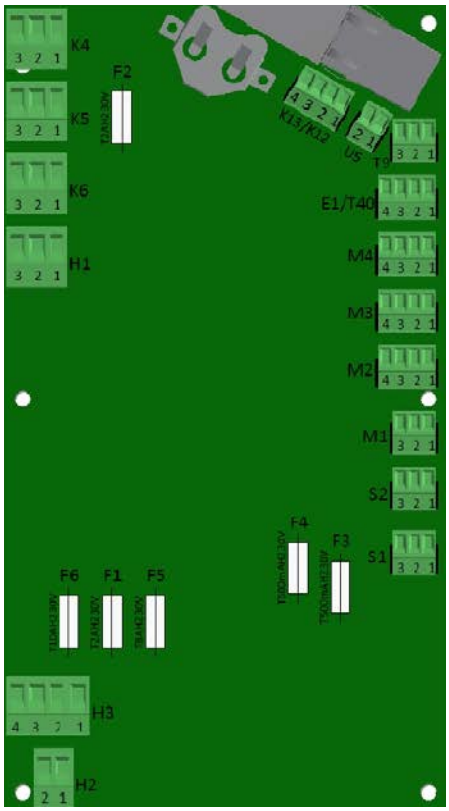

Illustration: Electrical connection of main board

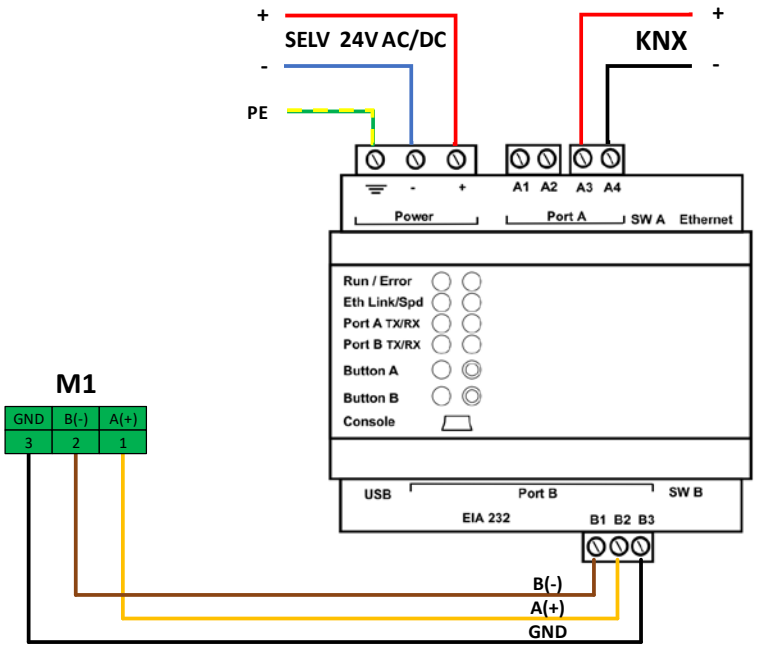

COMMISSIONING

17. Maintenance and cleaning

Always switch off the apparatus for cleaning and maintenance of the heat pump combi unit.

Be acutely aware of hazards and safety when opening or unscrewing the front hood or covers.

If possible, use a vacuum cleaner to remove dirt and dust. Applying force or using compressed air for cleaning may damage components and surfaces. Never use aggressive or solvent-containing cleaning agents. The electrical components must not be exposed to moisture or wet conditions.

Heed the *Safety notes in section 5* and in particular *see section 5.5 Electrical connections* when performing any electrical work.

17.1 CHECKLIST FOR MAINTENANCE WORK

WHAT	TASK	INTERVAL	WHO
Filter service	Check / replace	ca. 2-3 times p.a.	User / technical staff
Counterflow heat exchanger	Check / clean	annually	Technical staff
Fans	Check / clean	annually	Technical staff
Heat exchanger and condensate trays	Check / clean	annually	Technical staff
Refrigerant circulation	Inspection	annually[1] (recommended)	Technical staff

*[1] EU Regulation **2024/573** does not prescribe regular checks for leakage in the refrigerant circulation if the fill quantity is < 5 t CO2 equivalent. GWP for **R1234yf: 4***

17.2 CHECK AND CLEANING OF COUNTERFLOW HEAT EXCHANGER

Soiling of the counterflow heat exchanger will normally be only slight if the air filters are serviced at regular intervals.

- Remove the front hood. To do this, unscrew the securing screws.
- Remove the sealing plate.
- Use the strap to carefully extract the counterflow heat exchanger from its bracket.
- The condensate drainage pipes are afterwards only cleaned by rinsing with lukewarm water.

Under no circumstances use aggressive cleaning agents. Blowing out with compressed air may destroy the heat exchanger.

- After drying the counterflow heat exchanger it can be carefully re-inserted.

Ensure that the sealing profiles are properly seated.

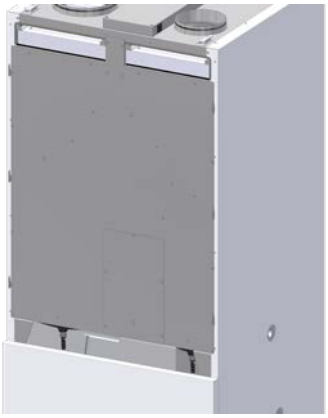

Illustration: Sealing plate

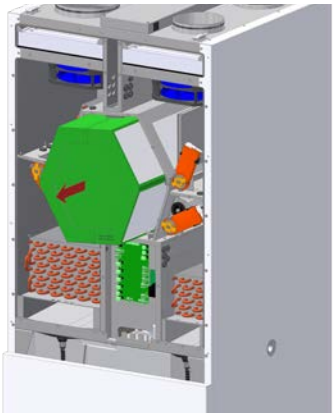

Illustration: Heat exchanger

17.3 CHECK AND CLEANING OF FANS

Cleaning may be required depending on the fans' level of soiling.

Maintenance and cleaning work is restricted to the fan housing and rotor.

Use a soft brush to clean the rotor. The fan housing can be cleaned with a vacuum cleaner.

The motor housing may be opened and works performed on the motor's electrical components by the manufacturer of the fan only. If the fan is defective in any way, it must be replaced with a new, original fan.

Be absolutely sure to avoid causing damage to the fan blades. Do not remove or damage existing balancing weights, since this may cause increasing noise and vibrations while the rotor is running.

17.4 CHECK AND CLEANING HEAT EXCHANGER AND CONDENSATE TRAYS

Use only lukewarm water to clean the supply air and exhaust air parts of the heat exchanger.

Do not expose electrical components such as expansion valves, solenoids and frequency converters to water! Under no circumstances use aggressive cleaning agents. Blowing out with compressed air may destroy the heat exchanger.

Preferably use a moist cloth to clean the condensate trays.

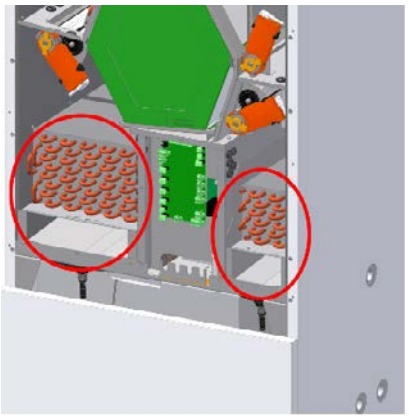

Illustration: Heat exchanger and condensate trays

17.5 CHECK AND CLEANING CONDENSATE DRAINS

The condensate drainage pipes and systems must operate perfectly to ensure proper operation of the plant. Check the functioning at regular intervals.
Remove any deposits or blockages in the discharge pipe and siphon.

The condensate drainage pipes are cleaned by rinsing with lukewarm water.

Illustration: Condensate drainage PKOM⁴ classic, right version

A functional test of the condensate drainage system must be conducted after completion of cleaning. Fill the condensate tray with sufficient water to do this. Make sure that the water in the tray flows safely into the drain via the condensate drainage pipe.

Ensure that the system is watertight.

Fill the odour trap (siphon) with water before switching the unit back on to prevent unpleasant smells and leaks.

17.6 INSPECTION OF THE COOLING CIRCUIT

Refrigerant circulation of the heat pumps is basically maintenance-free. ***Certified technical staff*** should, however, regularly check proper functionality of the apparatus in the course of inspections.

17.6.1 In compliance with the refrigeration plant directive and Directive (EU) No. 2024/573

Heat pump circuit	Refrigerant	Filling weight [kg]	GWP	CO_2 equivalent [t]	Heat output [kW]	to/tk [°C]	PS [bar][1)]
No. 1	R1234yf	1.0	4	0,004	1.5	-5 / 35	26
No. 2	R1234yf	1.0	4	0,004	1.3	-5 / 35	26
In compliance with Directive (EU) 2024/573, the device is hermetically tight							

[1)]PS [bar]: highest operating pressure

17.6.2 In compliance with Pressure Equipment Control Order DGÜW-V

Heat pump circuit	Fluid group	Greatest pressure litre product in the device	Hazard potential	Company audit by
No. 1	2	18.2	NP (low)	Qualified person
No. 2	2	17,68	NP (low)	Qualified person

17.6.3 In compliance with Directive (EC) No. 2024/510 and Directive (EU) No. 2024/573

Heat pump circuit	Contains fluorinated greenhouse gases recorded by the Kyoto protocol	Is a suitable leakage detection system available	The device has to be checked for tightness at regular intervals
No. 1	Yes	No	Not applicable
No. 2	Yes	No	Not applicable

17.7 MAINTENANCE CHECKLIST

Warranties shall be null and void unless regular servicing can be verified!

In order to document maintenance works, this table must be completed after performance of works on the unit:

System commissioned by:	Date
Company stamp/signature:	

No.	Maintenance work (e.g. filter change)	Performed by (signature)	Date
1			
2			
3			
4			
5			
6			
7			

8			
9			
10			
11			
12			
13			
14			
15			
16			
17			

17.8 PARAMETER LIST

ID	Parameter	Unit	Works	Set	Comment
A01	Operating mode	-	0		0 = off / 1 = summer / 2 = winter / 3 = automatic
A02	Damping, outside temperature	%	60		
A03	Heating limit	°C	14		No heating allowed above
A04	Hysteresis	K	2		
A05	Equipment type	-	0 / 1		0 = trend / 1 = classic
A06	Switch-on hysteresis, cooling	K	1		
A07	Switch-on hysteresis, heating	K	0.5		
A08	Switch-off hysteresis, heating	K	0.5		
A09	Enable – active cooling	-	0		0 = no / 1 = yes
A10	Room set-point, override	°C	22		
A11	Room set-point - cooling	°C	26		
A12	Room set-point, normal operation	°C	22		
A13	Room set-point, lowering operation	°C	20		
A14	Room set-point - holiday	°C	18		
A15	Room set-point, frost protection	°C	15		
A16	Room temperature sensor	-	0		0 = display / 1 = room sensor
A17	Room sensor	-	0		0 = via A16 / 1 = extract air sensor
A18	Demand-driven control	-	0		0 = no / 1 = CO_2-controlled / 2 = RF-controlled / 3 = CO_2- & RF-controlled
B11	Min. fresh air volume for enable of active cooling	°C	25		Cooling not enabled below this
C08	Air volume ventilation level 1 (SUP)	m^3/h	85		
C09	Air volume ventilation level 2 (SUP)	m^3/h	120		
C10	Air volume ventilation level 3 (SUP)	m^3/h	160		
C11	Air volume ventilation level 4 (SUP)	m^3/h	200		
C12	Extract air balance	%	0		Balancing extract/supply air
D02	Min. supply air, cooling	°C	15		
D05	Max. supply air temperature, heating	°C	40		
E07	Supply air volume in defrost operation	%	40		
F01	VHR fresh air temperature before WRG	°C	-8 / -3		With enthalpy / standard exchanger
G01	Min. fresh air temperature bypass	°C	12		No bypass operation below this
J01	CO2 concentration threshold	ppm	1000		Increase air volume
J02	Relative humidity high	%	70		Increase air volume
J03	Relative humidity low	%	30		Reduction of air volume
V01	Additional function	-	0		0 = no / 1 = solar system / 2 = heating circuit / 3 = duct heating battery / 4 = heating circuit & duct heating battery
V02	Min. storage temperature, Heating circuit enabled	°C	35		
V03	Heating circuit hysteresis	K	0.5		
V04	Set-point, heating circuit	°C	23		
V05	Solar hysteresis	K	5		
V06	Max. tank temperature, solar	°C	80		
V07	Delta T, solar collector to tank	K	10		
V13	Duct heating battery delay	Sec.	1800		
W01	Hot water set point temperature	°C	50		
W02	Hot water heating with WP	°C	55		
W03	Hot water heating with EHP	°C	65		
W04	Hot water set-point ECO tariff	°C	65		Smart Grid contact E1
W05	Enable EHP (E-heater)	-	0		0 = off / 1 = on

W08	EHP - Hysteresis	°C	10		Reference: Tank centre
W09	Min. tank temperature EHP on	°C	40		Reference: Tank centre
W10	Hysteresis, heat pump	K	7		Reference: Tank bottom
W11	Delta T centre - bottom	K	7		Delay, heat pump start
W12	Legionella protection function	-	0		0 = off / 1 = on
W13	Legionella protection interval	Days	14		
Y2	Filter life	Months	4		Filter replacement interval

17.9 ERROR DESCRIPTION

Error No.	Fault signal	What does that mean?	Troubleshooting	Correction
0	**Impressed current anode**	Fault of the impressed current anode	Check terminal K12 on heat pump board N3	Restore terminal contacts
			Check terminal X1 on anode board N4	Restore terminal contacts
			Check terminal D1 on heat pump board N3	Restore terminal contacts
			Check terminal X2 on anode board N4	Restore cable connection
			Check terminal X4 on anode board N4	Restore cable connection
			Check cable on the impressed current anode	Restore cable connection
			No error detectable	Please contact your service partner
4	**Error four-way valve**	Cooling or heating performance too low	Check the airflows	Replace polluted filters, clear blocked airways
			Check evaporator in the exhaust air	Induce manual defrosting
		The four-way valve is not working properly	Check terminals 1 and 2 at relay K11 on the heat pump board (N3)	Restore terminal contacts
			Check the connections on the coil of the magnetic valve (M12)	Restore terminal contacts
			Check cable W64	Replace cable W64
			Measure the voltage at terminals 1 and 2 of relay K11 - 0V in heating mode/230V in cooling mode	Replace heat pump board
			Check the magnetic coil of the four-way valves (M12) using a measuring device – the resistance value should be ~ 1.5kohms	Replace coil of magnetic valve
			Check whether the evaporator is frozen over	Induce manual defrosting
			Check the measuring hoses for differential pressure measurement at pressure transducer P3 on heat pump board N3	Clean the measuring hoses
			No error detectable	Please contact your service partner
5	**T1 - supply sensor**	The supply air temperature sensor is defective or the cable is broken	Check terminal T1 on ventilation board N2	Restore terminal contacts
			Check the temperature sensor using a measuring device – resistance value according to table 1	Replace the sensor
			No error detectable	Please contact your service partner
6	**T2 - room sensor**	The temperature sensor on the display is defective	Check the display	
			No error detectable	Please contact your service partner
7	**T3 - outdoor air sensor**	The outdoor air temperature sensor is defective or the cable is broken	Check terminal T3 on ventilation board N2	Restore terminal contacts
			Check the temperature sensor using a measuring device – resistance value according to table 1	Replace the sensor
			No error detectable	Please contact your service partner
8	**T4 - exhaust air sensor**	The exhaust air temperature sensor is defective or the cable is broken	Check terminal T4 on ventilation board N2	Restore terminal contacts
			Check the temperature sensor using a measuring device – resistance value according to table 1	Replace the sensor
			No error detectable	Please contact your service partner
9	**T5 - sensor upstream of WT3**	The temperature sensor upstream of heat exchanger WT3 in the exhaust air is defective or the cable is broken	Check terminal T5 on heat pump board N3	Restore terminal contacts
			Check the temperature sensor using a measuring device – resistance value according to table 1	Replace the sensor
			No error detectable	Please contact your service partner
10	**T6 - sensor T6 in WT3**	The temperature sensor of heat exchanger WT3 in the exhaust air is defective or the cable is broken	Check terminal T6 on heat pump board N3	Restore terminal contacts
			Check the temperature sensor using a measuring device – resistance value according to table 1	Replace the sensor
			No error detectable	Please contact your service partner

11	**T7 - extract air sensor**	The extract air temperature sensor is defective or the cable is broken	Check terminal T7 on ventilation board N2	Restore terminal contacts
			Check the temperature sensor using a measuring device – resistance value according to table 1	Replace the sensor
			No error detectable	Please contact your service partner
12	**T8 - sensor compliant with VHR**	The temperature sensor of the pre-heating battery in the outdoor air is defective or the cable is broken	Check terminal T8 on ventilation board N2	Restore terminal contacts
			Check the temperature sensor using a measuring device – resistance value according to table 1	Replace the sensor
			No error detectable	Please contact your service partner
13	**T9 - sensor solar/KHR**	The temperature sensor on the solar collector or downstream of the duct-heating battery in the supply air is defective or the cable is broken	Check terminals T9/1 and 2 of PT1000 sensor or terminals T9/2 and 3 of NTC sensor on the main board N1	Restore terminal contacts
			Check the temperature sensor using a measuring device – resistance value according to table 1 for NTC sensors or table 2 for PT1000 sensors	Replace the sensor
			No error detectable	Please contact your service partner
14	**T10 - sensor in WT2**	The temperature sensor of heat exchanger WT2 in the supply air is defective or the cable is broken	Check terminal T10 on heat pump board N3	Restore terminal contacts
			Check the temperature sensor using a measuring device – resistance value according to table 1	Replace the sensor
			No error detectable	Please contact your service partner
15	**T12 - sensor upstream of WT2**	The temperature sensor upstream of heat exchanger WT2 in the supply air is defective or the cable is broken	Check terminal T12 on ventilation board N3	Restore terminal contacts
			Check the temperature sensor using a measuring device – resistance value according to table 1	Replace the sensor
			No error detectable	Please contact your service partner
16	**T13 - sensor heating/cooling compressor**	The hot gas temperature sensor of the "heating/cooling" compressor" is defective or the cable is broken	Check terminal T13 on heat pump board N3	Restore terminal contacts
			Check the temperature sensor using a measuring device – resistance value according to table 1	Replace the sensor
			No error detectable	Please contact your service partner
17	**T21 - sensor Tank centre**	The centre temperature sensor in the service water tank is defective or the cable is broken	Check terminal T21 on heat pump board N3	Restore terminal contacts
			Check the temperature sensor using a measuring device – resistance value according to table 1	Replace the sensor CAUTION: Sensors T21 and T20 must be replaces as set!
			No error detectable	Please contact your service partner
18	**T20 - sensor Tank bottom**	The bottom temperature sensor in the service water tank is defective or the cable is broken	Check terminal T20 on heat pump board N3	Restore terminal contacts
			Check the temperature sensor using a measuring device – resistance value according to table 1	Replace the sensor CAUTION: Sensors T21 and T20 must be replaces as set!
			No error detectable	Please contact your service partner
19	**T22 - sensor service water compressor**	The hot gas temperature sensor of the "service water" compressor is defective or the cable is broken	Check terminal T13 on heat pump board N3	Restore terminal contacts
			Check the temperature sensor using a measuring device – resistance value according to table 1	Replace the sensor
			No error detectable	Please contact your service partner
20	**T30 - sensor EV heating**	The temperature sensor of the refrigerant suction line in heating mode is defective or the cable is broken	Check terminal T30 on heat pump board N3	Restore terminal contacts
			Check the temperature sensor using a measuring device – resistance value according to table 2	Replace the sensor
			No error detectable	Please contact your service partner
21	**T31 - sensor EV service water**	The temperature sensor of the refrigerant suction line in service water mode is defective or the cable is broken	Check terminal T31 on heat pump board N3	Restore terminal contacts
			Check the temperature sensor using a measuring device – resistance value according to table 2	Replace the sensor
			No error detectable	Please contact your service partner
22	**T32 - sensor EV cooling**	The temperature sensor of the refrigerant suction line in cooling mode is defective or the cable is broken	Check terminal T30 on heat pump board N3	Restore terminal contacts
			Check the temperature sensor using a measuring device – resistance value according to table 2	Replace the sensor
			No error detectable	Please contact your service partner
23	**T40 - sensor room**	The room temperature sensor T40 is defective or the cable is broken	Check terminal T40 on the main board N1	Restore terminal contacts
			Check the temperature sensor using a measuring device – resistance value according to table 1	Replace the sensor
			No error detectable	Please contact your service partner

24	**A1 - pressure-transmitter heating/cooling**	The pressure transmitter in the "heating/cooling" cooling circuit is measuring outside its circuit or is defective, or the cable is broken	Check the plug on the pressure transmitter B33	Restore contact with plug
			Check terminal A1 on heat pump board N3	Restore terminal contacts
			Check the cable	Replace the cable
			Check pressure transmitter B33	Replace the pressure transmitter
			No error detectable	Please contact your service partner
25	**A2 - pressure-transmitter service water**	The pressure transmitter in the "heating/cooling" cooling circuit is measuring outside its circuit or is defective, or the cable is interrupted	Check the plug on the pressure transmitter B33	Restore contact with plug
			Check terminal A1 on heat pump board N3	Restore terminal contacts
			Check the cable	Replace the cable
			Check pressure transmitter B33	Replace the pressure transmitter
			No error detectable	Please contact your service partner
26	**High pressure cooling circuit service water**	High-pressure switch in the service water cooling circuit has been activated	Check terminal E2 on heat pump board N3	Restore terminal contacts
			Check pressure switch B35 using a measuring device at terminals E2 on the heat pump board: Terminal E2/1 24VDC, terminal E2/2 24VDC PLEASE NOTE: Pressure in the service water cooling circuit must be below 20bar!	No voltage on terminal E2/2 – replace heat pump board N3 No voltage on terminal E2/1 – continue carrying out troubleshooting on the basis of the following items
			Check the connection of pressure switch B35	Restore contact
			Check the cable	Replace the cable
			Check pressure switch B35 using a measuring device, pull plug E2 on heat pump N3 and measure the resistance. The pressure switch must be uninterrupted in its normal state (NC) PLEASE NOTE: Pressure in the service water cooling circuit must be below 20bar!	Replace the pressure switch
			Check the temperature sensor tank bottom as in the case of error 18	
			Too much refrigerant in the service water cooling circuit	Extract refrigerant and refill with refrigerant
			No error detectable	Please contact your service partner
27	**Extract air fan**	The extract air fan does not work or is working at an incorrect speed	Check terminals K2 (voltage supply) on ventilation board N2	Restore terminal contacts
			Check terminals U2 (control signals) on ventilation board N2	Restore terminal contacts
			Check fuse F4 (24 VDC voltage supply) on main board N1 – table 3	Replace fuse
			Check the voltage supply on ventilation board N2: between terminals K2/1 and K2/2, 230 VAC must be measured. CAUTION: Heat pump must be switched on, automatic mode must be selected and all faults must be reset	a) Check fuse F1 on main board N1 b) Check terminals H2 on main board N1 c) Check terminals H4 on ventilation board N2 d) Replace ventilation board N
			Check fan M2 with regard to free run and damage	Replace fan
			No error detectable	a) Replace the ventilation board b) Contact your service partner
28	**Outdoor air fan**	The outdoor air fan does not work or is working at an incorrect speed	Check terminals K1 (voltage supply) on ventilation board N2	Restore terminal contacts
			Check terminals U1 (control signals) on ventilation board N2	Restore terminal contacts
			Check fuse F4 (24 VDC voltage supply) on main board N1 – table 3	Replace fuse
			Check the voltage supply on ventilation board N2: between terminals K1/1 and K1/2, 230 VAC must be measured. CAUTION: Heat pump must be switched on, automatic mode must be selected and all faults must be reset	Replace ventilation board N2
			Check fan M1 with regard to free run and damage	Replace fan
			No error detectable	a) Replace the ventilation board b) Contact your service partner

29	**Outdoor air / exhaust air flap**	The position of the fins from the outdoor air/exhaust air flap is incorrect	Check terminals U3 on ventilation board N2	Restore terminal contacts
			Check flap drive M4 for ease of operation	Replace flap drive M4
			Check the multi-leaf damper for ease of operation	Replace the multi-leaf damper
			Ensure that flap drive M4 is mounted correctly. Set the system to "Off" at the display, wait for 5 minutes. The multi-leaf damper must be closed.	Mount flap drive M4 on the closed multi-leaf damper
			Check fuse F4 (24 VDC voltage supply) on main board N1 – table 3	Replace fuse
			No error detectable	a) Replace the ventilation board b) Contact your service partner
30	**Outdoor air / supply air flap**	The position of the fins from the outdoor air/supply air flap is incorrect	Check terminals U3 on ventilation board N2	Restore terminal contacts
			Check flap drive M4 for ease of operation	Replace flap drive M4
			Check the multi-leaf damper for ease of operation	Replace the multi-leaf damper
			Ensure that flap drive M4 is mounted correctly. Set the system to "Off" at the display, wait for 5 minutes. The multi-leaf damper must be closed.	Mount flap drive M4 on the closed multi-leaf damper
			Check fuse F4 (24 VDC voltage supply) on main board N1 – table 3	Replace fuse
			No error detectable	Please contact your service partner
31	**Communication ventilation board**	Erroneous BUS communication between the main and ventilation board	Check terminals M2 on the main board N1	Restore terminal contacts
			Check terminals M4 on ventilation board N2	Restore terminal contacts
			Check cable W61	Replace cable W61
			Check fuse F4 (24 VDC voltage supply) on main board N1 – table 3	Replace fuse
			No error detectable	Please contact your service partner
32	**Communication Heat pump board**	Erroneous BUS communication between the main and heat pump board	Check terminals M3 on the main board N1	Restore terminal contacts
			Check terminals M5 on ventilation board N3	Restore terminal contacts
			Check cable W62	Replace cable W62
			Check fuse F4 (24 VDC voltage supply) on main board N1 – table 3	Replace fuse
			No error detectable	Please contact your service partner
33	**Communication Operating unit**	Erroneous BUS communication between the display main board	Check terminals B1 on the main board N1	Restore terminal contacts
			Check terminals on display A1	Restore terminal contacts
			Check cable W2	Replace cable W2
			Check fuse F3 (24 VDC voltage supply) on main board N1 – table 3	Replace fuse
			No error detectable	a) Replace the display b) Contact your service partner
34	**Power measurement service water compressor**	The measured electrical performance of the "service water" compressor is not plausible	Check whether the service water compressor is in operation while the heat pump is running in service water mode	
			Check terminals K10 on heat pump board N3	Restore terminal contacts
			Check terminals on operating capacitor C1	Restore terminal contacts
			Check the terminals on service water compressor G1	Restore terminal contacts
			Check the cables	Replace cables
			Check operating capacitor C1	Replace operating capacitor C1
			Use the data logger to check whether a power is displayed during operation of service water compressor G1	Replace main board N1
			No error detectable	Please contact your service partner

35	**Performance measurement heating/cooling compressor**	The measured electrical performance of the "heating/cooling" compressor is not plausible	Check whether the heating/cooling compressor is in operation while the heat pump is running in heating/cooling mode	
			Use the data logger to check whether a power is displayed during operation of heating/cooling compressor G2	Replace main board N1
			No error detectable	Please contact your service partner
36	**Performance measurement of boards**	The measured electrical performance of the control is not plausible	Use the data logger to check whether a power is displayed during operation of the heat pump	Replace main board N1
			No error detectable	Please contact your service partner
37	**FU communication**	Erroneous BUS communication between the main board and the frequency inverter	Check terminal M6 on heat pump board N3	Restore terminal contacts
			Check the terminal of the plug on frequency inverter T1	Restore terminal contacts
			Check cable W63	Replace cable W63
			Check whether a bus connection in heating/cooling operation is established: LED on terminal M6 on heat pump board N3 is blinking	a) Replace heat pump board N3 b) Replace frequency inverter T1
			No error detectable	Please contact your service partner
38	**FU max. temperature error**	Frequency inverter overheats	Check frequency inverter T1	Replace frequency inverter T1
			No error detectable	Please contact your service partner
39	**FU motor start error**	Frequency inverter cannot start the "heating/cooling" compressor	Check the terminals on frequency inverter T1	Restore terminal contacts
			Check cable W54	Replace cable W54
			Check frequency inverter T1	Replace frequency inverter T1
			Check "heating/cooling" compressor G2	Replace "heating/cooling" compressor G2
			No error detectable	Please contact your service partner
40	**FU motor current error 1**	Too high motor current over a period of 4 minutes	Check frequency inverter T1	Replace frequency inverter T1
			Check "heating/cooling" compressor G2	Replace "heating/cooling" compressor G2
			No error detectable	Please contact your service partner
41	**FU motor current error 2**	Motor current 1.25 times too high over a period of 2 minutes	Check frequency inverter T1	Replace frequency inverter T1
			Check "heating/cooling" compressor G2	Replace "heating/cooling" compressor G2
			No error detectable	Please contact your service partner
42	**FU motor current error 3**	Motor current 1.5 times too high over a period of 1 minute	Check frequency inverter T1	Replace frequency inverter T1
			Check "heating/cooling" compressor G2	Replace "heating/cooling" compressor G2
			No error detectable	Please contact your service partner
43	**FU motor current error 4**	Motor current twice too high over a period of 10 seconds	Check frequency inverter T1	Replace frequency inverter T1
			Check "heating/cooling" compressor G2	Replace "heating/cooling" compressor G2
			No error detectable	Please contact your service partner
44	**FU short circuit current error**	Short circuit current on the frequency inverter	Check the terminals on frequency inverter T1	Restore terminal contacts
			Check cable W54	Replace cable W54
			Check frequency inverter T1	Replace frequency inverter T1
			Check "heating/cooling" compressor G2	Replace "heating/cooling" compressor G2
			No error detectable	Please contact your service partner
45	**FU motor phase error**	Missing phase on the compressor	Check the terminals on frequency inverter T1	Restore terminal contacts
			Check cable W54	Replace cable W54
			Check frequency inverter T1	Replace frequency inverter T1
			Check "heating/cooling" compressor G2	Replace "heating/cooling" compressor G2
			No error detectable	Please contact your service partner
46	**FU motor standstill error**	No compressor speed	Check frequency inverter T1	Replace frequency inverter T1
			No error detectable	Please contact your service partner
47	**FU motor control error**	Overvoltage or undervoltage error	Check frequency inverter T1	Replace frequency inverter T1
			No error detectable	Please contact your service partner

48	**Safety chain heating/cooling compressor**	High-pressure switch in the "heating/cooling" cooling circuit has been activated. Compressor is running outside of its operating limits.	Check air volume flow on the supply side, as in the case of errors 28 and 30	Error correction as in the case of errors 28 and 30
			Check terminals on frequency inverter T1	Restore terminal contacts
			Check the connection on pressure switch B36	Restore contact
			Check cable W65	Replace cable W65
			Check pressure switch B36 using a measuring device, pull the plugs on pressure switch B6 and measure the resistance. The pressure switch must be uninterrupted in its normal state (NC) PLEASE NOTE: The pressure in the "heating/cooling" cooling circuit must be below 20bar!	Replace the pressure switch
			Too much refrigerant in the "heating/cooling" cooling circuit	Extract cooling circuit and refill with cooling medium
			No error detectable	Please contact your service partner
			Check air volume flow on the supply side, like with errors 28 and 30	
		Overtemperature thermostat on the "heating/cooling" compressor has been activated. Compressor is running outside of its operating limits.	Check terminals on frequency inverter T1	Restore terminal contacts
			Check the connection on overtemperature thermostat F4	Restore contact
			Check cable W65	Replace cable W65
			Check pressure switch B36 using a measuring device, pull the plugs on overtemperature thermostat F4 and measure the resistance. The pressure switch must be uninterrupted in its normal state (NC).	Replace the overtemperature thermostat F4
			Not enough refrigerant in the "heating/cooling" cooling circuit	Leakage search and correction in the "heating/cooling" cooling circuit
			Evaporating temperature in the "heating/cooling" cooling circuit too low	a) Check defrosting b) Check air volume flow for extract/exhaust air
			No error detectable	Please contact your service partner
49	**FU Modbus heartbeat error**	Erroneous BUS communication between the main board and the frequency inverter	Check frequency inverter T1	Replace frequency inverter T1
			No error detectable	Please contact your service partner
50	**FU fatal error**	Fatal frequency inverter error	Check terminals H4 on main board N1	Restore terminal contacts
			Check terminal H5 on heat pump board N3	Restore terminal contacts
			Check terminals on frequency inverter T1	Restore terminal contacts
			Check frequency inverter T1	Replace frequency inverter T1
			No error detectable	Please contact your service partner
51	**Recurrent FU error**	Frequency inverter error that has occurred 3 times during the last hour	Check terminal M6 on heat pump board N3	Restore terminal contacts
			Check terminals on frequency inverter T1	Restore terminal contacts
			Check cable W63	Replace cable W63
			Check whether a bus connection in heating/cooling operation is established: LED on terminal M6 on heat pump board N3 is blinking	a) Replace heat pump board N3 b) Replace frequency inverter T1
			Check frequency inverter T1	Replace frequency inverter T1
			No error detectable	Please contact your service partner
52	**High compressor temp. Heating/cooling**	Too high hot gas temperature at the "heating/cooling" compressor. Compressor is running outside of its operating limits.	Check air volume flow on the supply side, like with errors 28 and 30	Error correction as in the case of errors 28 and 30
			Check sensor T13 as in the case of error 16	Error correction as in the case of error 16
			Not enough refrigerant in the "heating/cooling" cooling circuit	Leakage search and correction in the "heating/cooling" cooling circuit
			Evaporating temperature in the "heating/cooling" cooling circuit too low	a) Check defrosting b) Check air volume flow for extract/exhaust air
			No error detectable	Please contact your service partner

53	**High compressor temp. Service water**	Too high hot gas-temperature at the service water compressor. Compressor is running outside of its operating limits.	Check the air volume flow on the exhaust air side	
			Check the outdoor air / exhaust air flap as in the case of error 29	
			Troubleshooting as in the case of item 29	
			Check temperature sensor T21 tank bottom as in the case of error 17	
			Check the temperature sensor T20 tank bottom as in the case of error 18	
			Check the temperature sensor T22 tank bottom as in the case of error 19	
			Not enough refrigerant in the "service water" cooling circuit	Leakage search and correction in the "service water" cooling circuit
			Evaporating temperature in the "service water" cooling circuit too low	a) Check defrosting b) Check air volume flow for extract/exhaust air
			No error detectable	Please contact your service partner
54	**Compressor temp. three times too high Service water**	Hot gas-temperature at the service water compressor three times too high. Compressor is running outside of its operating limits.	Troubleshooting and correction as in the case of error 53	
			No error detectable	Please contact your service partner
55	**Capacitor temperature too high**	Surface temperature at heat exchanger WT2 or WT3 gets too hot	Check air volume flow on the supply side, like with errors 28 and 30	
			No error detectable	Please contact your service partner
56	**Defrost time exceeded**	The evaporator is not fully defrosted within the maximum permissible time	Reduce the supply air volume in defrost operation	
			Check the differential pressure measurement P3 via the evaporator	a) Clean measuring hoses of differential pressure transducer P3 on heat pump board N3 b) Check the value of the P3
		Magnetic valve M10 doesn't open when the heating/cooling compressor is running in defrost mode	Check terminals K7 on heat pump board N3	Restore terminal contacts
			Check the coil of magnetic valve M10 using a multimeter: pull the plug K7 and measure the resistance at the cable. The value should be between 1100 and 1200 ohms.	Replace the coil of the magnetic valve
			Check relay K7 on heat pump board N3: Voltage measurement on terminals K7/3 and K7/4, in defrost mode you should measure 230VAC	Replace heat pump board N3
			No error detectable	Please contact your service partner
		Magnetic valve M11 doesn't open when the service water compressor is running in defrost mode	Check terminals K8 on heat pump board N3	Restore terminal contacts
			Check the coil of magnetic valve M11 using a multimeter: pull the plug K8 and measure the resistance at the cable. The value should be between 1100 and 1200 ohms.	Replace the coil of the magnetic valve
			Check relay K8 on heat pump board N3: Voltage measurement on terminals K8/1 and K8/2, in defrost mode you should measure 230VAC	Replace heat pump board N3
			No error detectable	Please contact your service partner
57	**Heating/cooling low-pressure fault**	The evaporator is frozen	Troubleshooting and correction as in the case of error 56	
		Too low air volume flow via the evaporator	Check air volume flow on the exhaust side	
		Lack of refrigerant	Not enough refrigerant in the "heating/cooling" cooling circuit	Leakage search and removal of the leakage in the "heating/cooling" cooling circuit
		Expansion valve EV2 does not open	Check terminals EV2 on heat pump board N3	Restore terminal contacts
			Check expansion valve drive M14	Replace the expansion valve drive
			Check expansion valve EV2	Replace the expansion valve
		Expansion valve EV3 does not open	Check terminals EV3 on heat pump board N3	Restore terminal contacts
			Check expansion valve drive M15	Replace the expansion valve drive
			Check expansion valve EV3	Replace the expansion valve
			No error detectable	Please contact your service partner
58	**Service water low-pressure fault**	The compressor is frozen	Troubleshooting and correction as in the case of error 56	
		Too low air volume flow via the evaporator	Check air volume flow on the exhaust side	
		Lack of refrigerant	Not enough refrigerant in the "service water" cooling circuit	Leakage search and removal of the leakage in the service water cooling circuit
		Expansion valve EV2 does not open	Check terminals EV2 on heat pump board N3	Restore terminal contacts
			Check expansion valve drive M14	Replace expansion valve drive M14
			Check expansion valve EV2	Replace expansion valve EV2

18. Installation/Operation of service software and firmware updates

The control unit must be connected to a laptop via the micro-USB cable in order to perform troubleshooting.

Further information on installation / operation of service software and firmware updates is available from certified partners on request.

Service hotline: +43 (0)463 32769-290
Email: service@pichlerluft.at

19. Spare parts and accessories

Only original spare parts may be used for mounting when repairs and replacements are made.

The system can only be operated safely when original spare parts are used.

19.1 CONTROL ELEMENTS

Designation	Item number
STANDARD. TOUCH control unit	08PKOM4TC1A
Room CO_2 sensor for on-wall mounting	07RCO248330
Room humidity sensor for on-wall mounting	07RHF49360
Room temperature sensor for on-wall mounting	07RTF49357
Cables for control unit	40LG040340

19.2 SYSTEM COMPONENTS

Designation	Item number
Heating circuit module PKOM⁴	08PKOM4HBK33
Wall bracket set for heating circuit module	08PKOM4WHHBK33
External electric heating battery PKOM⁴, ø 160 mm, 1200 W	08CV16121VICIAL
Duct temperature sensor with metal sleeve, NTC, cable length 2 m	40LG041920
Wall duct PKOM⁴, ø 160 mm	08PKOMMLA160
Wall duct PKOM⁴, ø 200 mm	08PKOMMLA200

19.3 AIR FILTER

Designation	Item number
ETA filter ISO ePM10 75% (extract air), filter medium synthetic	40LG050280
ODA filter ISO ePM1 55% (outdoor air), filter medium glass fiibre	40LG050290

19.4 GATEWAY

Designation	Item number
Modbus/KNX-Gateway	08KNXGAC

20. Technical specifications

20.1 VENTILATION PART WITH HEAT PUMP

	PKOM⁴ classic	PKOM⁴ trend
Position of the nameplate	Top right	Top right
Volume flow	85 – 250 m^3/h variable	85 – 250 m^3/h variable
Ventilation stages	4	4
Max. air volume (V_{max})	250 m^3/h	250 m^3/h
Nominal air volume (V_{ref})	175 m^3/h	175 m^3/h
Max. external compression at V_{max}	> 200 Pa	> 200 Pa
Permissible outdoor air temperature	-15 to +40 °C	-15 to +40 °C
Max. heating output with/without heat recovery at A2/A50 and V_{ref}	2.362 W / 1.495 W	2.362 W / 1.495 W
Max. cooling output with/without heat recovery at A35 at V_{max}	1.950 W / 1.365 W	1.950 W / 1.365 W
Performance control	variable	variable
Seasonal energy efficiency of room heating	1,29	1,29
Refrigerant	R1234yf / 4 kg CO2 eq (100 years)	R1234yf / 4 kg CO2 eq (100 years)
Fill volume	1 Kg	1 Kg
Outdoor/indoor heat exchanger of the heat pump	air to air	air to air
Sound power level LWA in dB, indoors / outdoors	52 dB(A) / 0 dB(A)	52 dB(A) / 0 dB(A)
Additional heater available	yes	yes
Compressor type	BLDC electric motor	BLDC electric motor

VALUES ACCORDING TO EN16573 AND EN13141-7		
Temperature change on the supply air side	0,92	0,92
Heat output with/without heat recovery at A2/A35 and V_{ref}	1.786 W / 860 W	1.786 W / 860 W
EER cooling with/without heat recovery with A2/A35 at V_{ref}	5,91 / 3,32	5,91 / 3,32
Max. cooling output with/without heat recovery at A35 at V_{ref}	1.207 W / 655 W	1.207 W / 655 W
EER cooling with/without heat recovery with A35 at V_{ref}	3,29 / 2,05	3,29 / 2,05
Specific Input power SIP/SEL (standard heat exchanger)	0,29 W/(m^3/h)	0,29 W/(m^3/h)
Leckage external/internal	1,4 % / 1,9 %	1,4 % / 1,9 %

20.2 HOT WATER PART WITH HEAT PUMP

VALUES ACCORDING TO EN 16147	PKOM⁴ classic
Storage tank volume	212 / 220 liter
Max. household hot water temperature with heat pump	55°C
Max. heating power, heat pump	1.400 W
Electric-heating EHP (electric heating element)	1.500 W
Max. household hot water temperature with EHP (electric heating element)	65°C
Legionella protection	yes
Refrigerant	R1234yf
Fill volume	1 Kg
Consumption pattern	L (Large)
Energy efficiency class	A
Energy efficiency	0,8
Outdoor/indoor heat exchanger of the heat pump	air to water
Compressor type	BLDC electric motor

20.3 ELECTRICAL

	PKOM⁴ classic	PKOM⁴ trend
Electrical connection	230V ~ 1/50 Hz	230V ~ 1/50 Hz
Max. power consumption	2.800 W	750 W
Max. current consumption	12,8	3,8
Earth leakage circuit breaker	Type A – pulsstromsensitiv	Type A – pulsstromsensitiv
Line fuse	C16A	C16A

20.4 HOUSING

	PKOM⁴ classic	PKOM⁴ trend
Material	Powder coated sheet steel	Powder coated sheet steel
Duct connections supply air/extract air	Ø 160 mm	Ø 160 mm
Duct connections outdoor air/exhaust air	Ø 200 mm	Ø 160 mm
Dimensions (W x H x D)	741 x 2003 x 734 mm	741 x 1334 x 734 mm
Weight	240 kg	140 kg

20.5 ACOUSTIC DATA

The acoustic measurements pursuant to EN 12102 refer to an airflow of 250 m^3/h with 100 Pa external compression and activated heat pump.

	Measuring point		Supply air connecting piece	Outdoor air connecting piece	Extract air connecting piece	Exhaust air connecting piece	Housing emission
100 Pa	63 Hz	L_W	74,8	75,3	72,1	73,8	49,3
	125 Hz		46,4	67,9	66,2	52,0	55,1
	250 Hz		51,7	69,0	70,5	53,5	53,1
	500 Hz		43,6	56,6	58,2	45,1	40,1
	1000 Hz		33,9	52,8	56,6	40,4	35,1
	2000 Hz		25,6	53,4	52,3	27,2	30,4
	4000 Hz		14,9	43,5	47,2	14,1	24,2
	8000 Hz		1,2	26,8	33,9	1,5	19,8
	Total L_{WA} in dB (A)		**50,3**	**63,1**	**64,4**	**50,8**	**47,1**

Remark: Tolerances ± 2 dB for acoustic data

20.6 RESISTANCE VALUES TEMPERATURE SENSOR

NTC10kOhm		PT1000	
Temperature in °C	Resistance in kOhm	Temperature in °C	Resistance in Ohm
-50	667.83	-50	803.1
-40	335.67	-40	842.7
-30	176.68	-30	882.2
-20	96.97	-20	921.6
-10	55.3	-10	960.9
0	32.65	0	1000
10	19.9	10	1039
20	12.49	20	1077.9
25	10	30	1116.7
30	8.06	40	1155.4
40	5.32	50	1194
50	3.6	60	1232.4
60	2.49	70	1270.8
70	1.75	80	1309
80	1.26	90	1347.1
90	0.92	100	1385.1
100	0.68	-	-

20.7 DATA IN ACCORDANCE WITH EU REGULATIONS

The heat pump fulfills the requirements of the Ecodesign Directive, in accordance with EU Regulations 812/813-2013.

Specific energy consumption: Efficiency class A is achieved with an outdoor air temperature of +7°C (+6°C wet bulb).

Product fiche — Heat pump combi unit: PKOM⁴ A.S/F

supplier's name or trade mark	J. Pichler GmbH
model identifier	PKOM⁴ A.S/F
declared load profile	L
water heating energy efficiency class	A
water heating energy efficiency	80,3 %
the annual electricity consumption in kWh in terms of final energy	1274 kWh
temperature settings, as placed on the market	55 °C
the sound power level L_{WA} in dB, indoors	52 dB(A)
able to work only during off-peak hours	no
precautions when assembled, installed or maintained	see operating and installation instructions
storage volume in litres	212 l

Filter change
The filters are to be replaced as soon as the command to replace the filters appears on the display of the operator control unit (marked red in the picture alongside).

CAUTION:
If the filters are not changed regularly, the system can not work efficiently and the power consumption increases.

Operator control unit "TOUCH"

Waste disposal
Units that are no longer in working order have to be dismantled and properly disposed of by a specialized company via suitable collection centres and in compliance with the waste electrical and electronic equipment ordinance (WEEE), which provides for ratification of community law, directive 202/95/EC (RoHS) and the directive 2002/96/EC (the WEEE directive).

Information based on the current state of knowledge of EU Regulation 812/2013
Download from: www.pichlerluft.at

Responsible for the content: J. Pichler Gesellschaft m.b.H.
Photos: Archiv J. Pichler Gesellschaft m.b.H. | ***Text:*** J. Pichler Gesellschaft m.b.H.
All rights reserved | All photos are symbolic photos | Subject to change without notice | ***Version:*** 02/2025 eh

PICHLER
Systematic ventilation.

J. PICHLER
Gesellschaft m.b.H.

office@pichlerluft.at
www.pichlerluft.at

ÖSTERREICH
9021 KLAGENFURT
AM WÖRTHERSEE
Karlweg 5
T +43 (0)463 32769
F +43 (0)463 37548

ÖSTERREICH
1100 WIEN
Doerenkampgasse 5
T +43 (0)1 6880988
F +43 (0)1 6880988-13

Sales offices in Slovenia and Serbia. Sales partners in Germany, Switzerland and Italy.

Download from www.pichlerluft.at

21. Changes reserved

It is our constant endeavour to technically improve and optimise our products and we reserve the right to change the design of the units or the technical specifications without prior notice.

Notes

Notes

klimaaktiv Partner

PASSIVHAUS Austria

Mitglied NETZWERK PASSIVHAUS www.passivhaus.at

Responsible for the content J. Pichler Gesellschaft m.b.H. |
J. Pichler Gesellschaft m.b.H. archives | ***Text:*** J. Pichler Gesellschaft m.b.H.
All rights reserved | All photos Symbol photos| | Subject to change without notice | ***Version:*** 07/2025 eh

PICHLER

Systematic ventilation.

Climavent
ventilatie voor de vakman

J. PICHLER
Gesellschaft m.b.H.

AUSTRIA
9021 KLAGENFURT AM WÖRTHERSEE
Karlweg 5
T +43 (0)463 32769
F +43 (0)463 37548

1100 WIEN
Doerenkampgasse 5
T +43 (0)1 6880988
F +43 (0)1 6880988-13

office@pichlerluft.at
www.pichlerluft.at

PICHLER & CO d.o.o.
prezračevalni sistemi

SLOVENIA
2000 MARIBOR
Cesta k Tamu 26
T +386 (0)2 46013-50
F +386 (0)2 46013-55

pichler@pichler.si
www.pichler.si

KLIMA DOP d.o.o.
klimatizacija i ventilacija

SERBIA
11070 NOVI BEOGRAD
Autoput Beograd-Zagreb bb (Blok 52 – prostor GP „Novi Kolektiv")
T +381 (0)11 3190177
F +381 (0)11 3190563

office@klimadop.com
www.klimadop.com